FC Series
Face driver



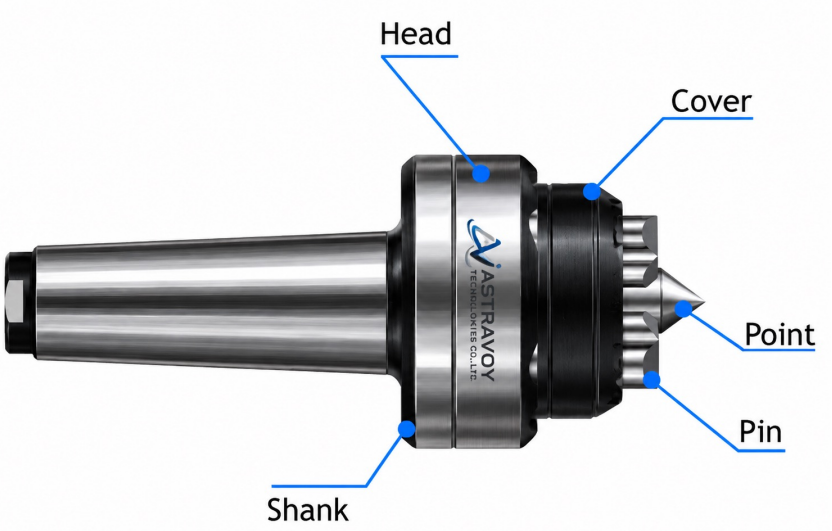

- Minimum working time loss and productivity improvement by 1-time clamping
- Auto-adjustable accuracy as in itself to material surface
- High-wear performance
- Wide-use to NC. owing to possible the chucking regardless of any model with morse taper type and straight type

- 一次性夹紧工作 减少工作时间损失 可完成生产量提升
- 对于工件表面精度本体自然调节
- 耐磨性优
- 目前我司有两种锥度柄径和直柄柄径的顶尖制作而成 不管什么机型都可以装夹 种类繁多的NC车床可使用

Astra-FC

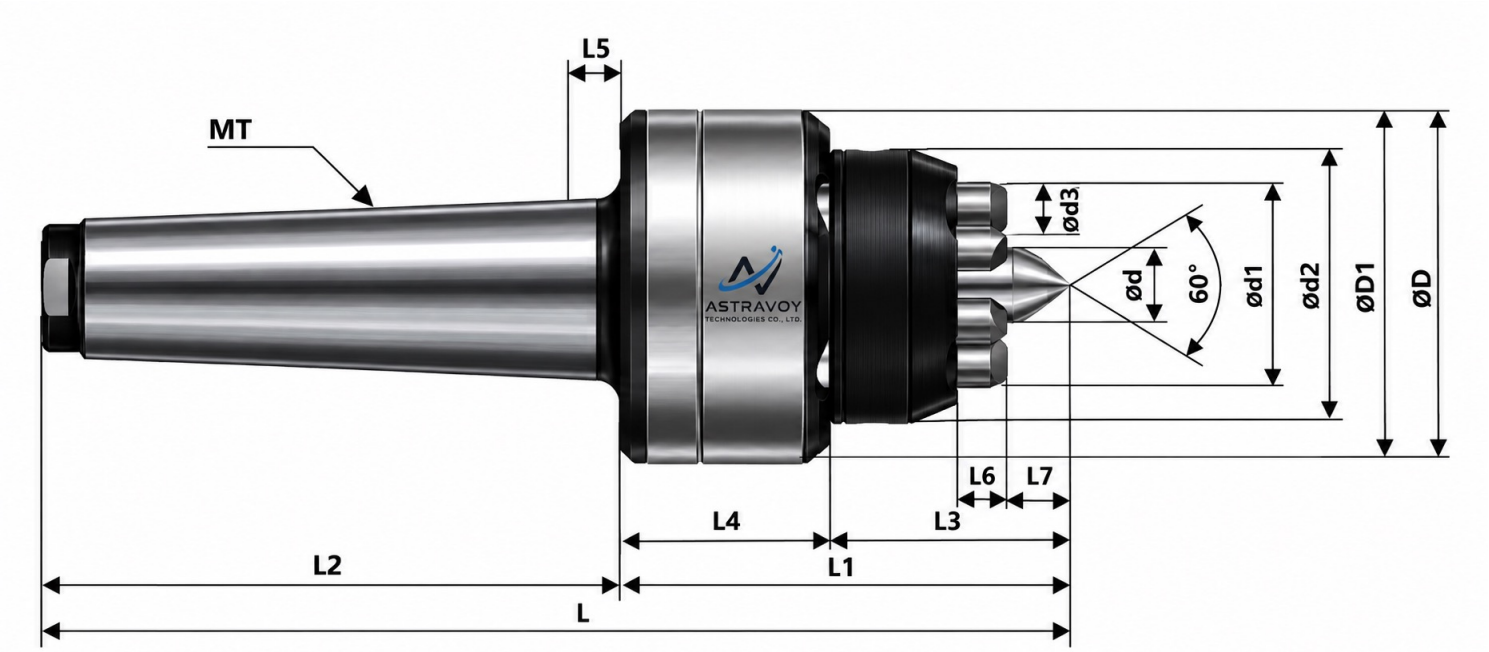

Dimension

Model No	Model	Morse Taper	Dimension													Work Size	MAX Weight(kg)
			Φd	Φd1	Φd2	Φd3	ΦD	ΦD1	L	L1	L2	L3	L4	L5	L6	L7	
1007013	3FC10	MT3	5	17	28	5	41.4	41	141.3	56.3	85	31.8	24.5	6	5	5.3	Φ18~Φ38	55
1007014	4FC10	MT4	5	17	28	5	41.4	41	164.3	56.3	108	31.8	24.5	8	5	5.3		
1007015	5FC10	MT5	5	17	28	5	41.4	41	192.3	56.3	136	31.8	24.5	8	5	5.3		
1007023	3FC20	MT3	9	26	38	7	52	51.4	148.8	63.8	85	36.8	27	6	6.5	8.8	Φ27~Φ55	60
1007024	4FC20	MT4	9	26	38	7	52	51.4	171.8	63.8	108	36.8	27	8	6.5	8.8		
1007025	5FC20	MT5	9	26	38	7	52	51.4	199.8	63.8	136	36.8	27	8	6.5	8.8		
1007033	3FC30	MT3	14	38	52	9	68	67.4	168	83	85	47	36	6	9	13	Φ39~Φ75	70
1007034	4FC30	MT4	14	38	52	9	68	67.4	191	83	108	47	36	8	9	13		
1007035	5FC30	MT5	14	38	52	9	68	67.4	219	83	136	47	36	8	9	13		
1007044	4FC40	MT4	18	54	72	14	83.5	82.5	200.6	92.6	108	57.6	35	8	11	15.6	Φ55~Φ100	100
1007045	5FC40	MT5	18	54	72	14	83.5	52.5	228.6	92.6	136	57.6	35	8	11	15.6		

- ▶Suitable for repeat production and mass production
- ▶Center for precision work
- ▶Carbide hardness HRA 90~91
- ▶ 适合用于反复量产及要求高精密同心度的NC车床顶尖
- ▶ 硬质合金硬度为 HRA 90-91

Astra-FCST

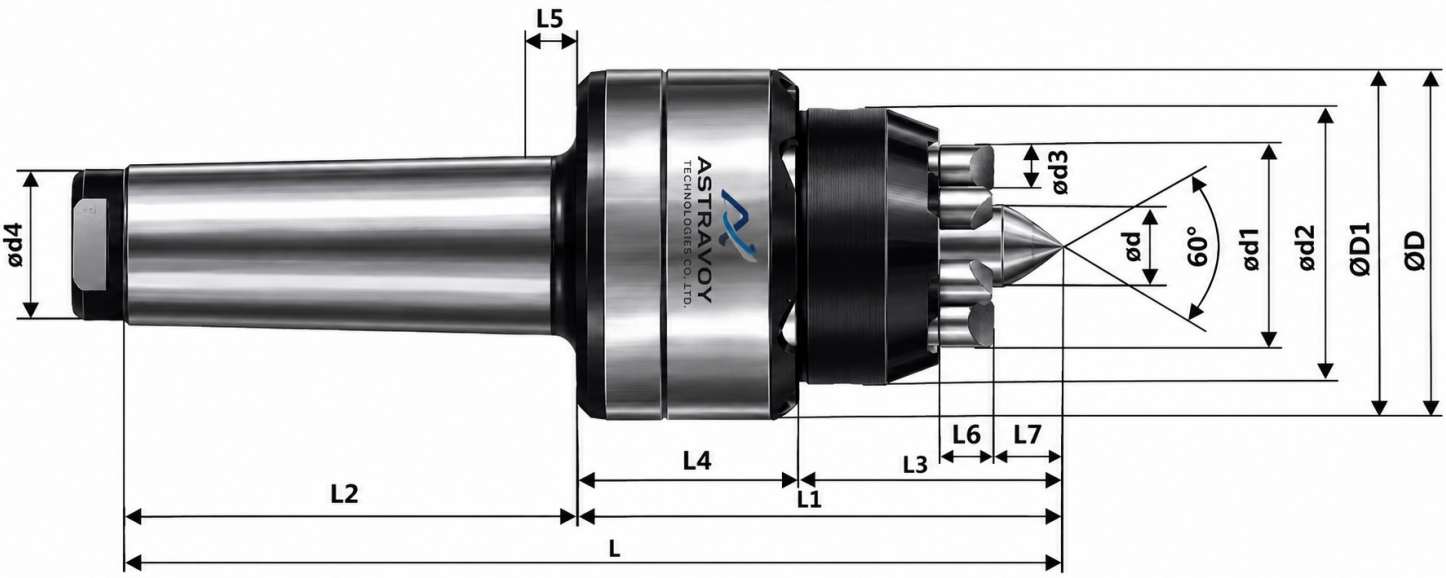

Dimension

Model No	Model	Dimension													Work Size	MAX Weight(kg)
		Φd	Φd1	Φd2	Φd3	Φd4	ΦD	ΦD1	L	L1	L2	L3	L4	L6	L7	
1007010ST	FCST10	5	17	28	5	35	41.4	41	141.3	56.3	85	31.8	24.5	5	5.3	Φ18~Φ38	55
1007020ST	FCST20	9	26	38	7	35	52	51.4	148.3	63.8	85	36.8	27	6.5	8.8	Φ27~Φ55	60
1007030ST	FCST30	14	38	52	9	35	68	67.4	168	83	85	47	36	9	13	Φ39~Φ75	70
1007040ST	FCST40	18	54	72	14	41	83.5	82.5	177.6	92.6	85	57.6	35	11	15.6	Φ55~Φ100	100

▶Suitable for repeat production and mass production
▶Center for precision work
▶Carbide hardness HRA 90~91
▶适合用于反复量产及要求高精密同心度的NC车床顶尖
▶硬质合金硬度为 HRA 90-91

Astra-FCDST

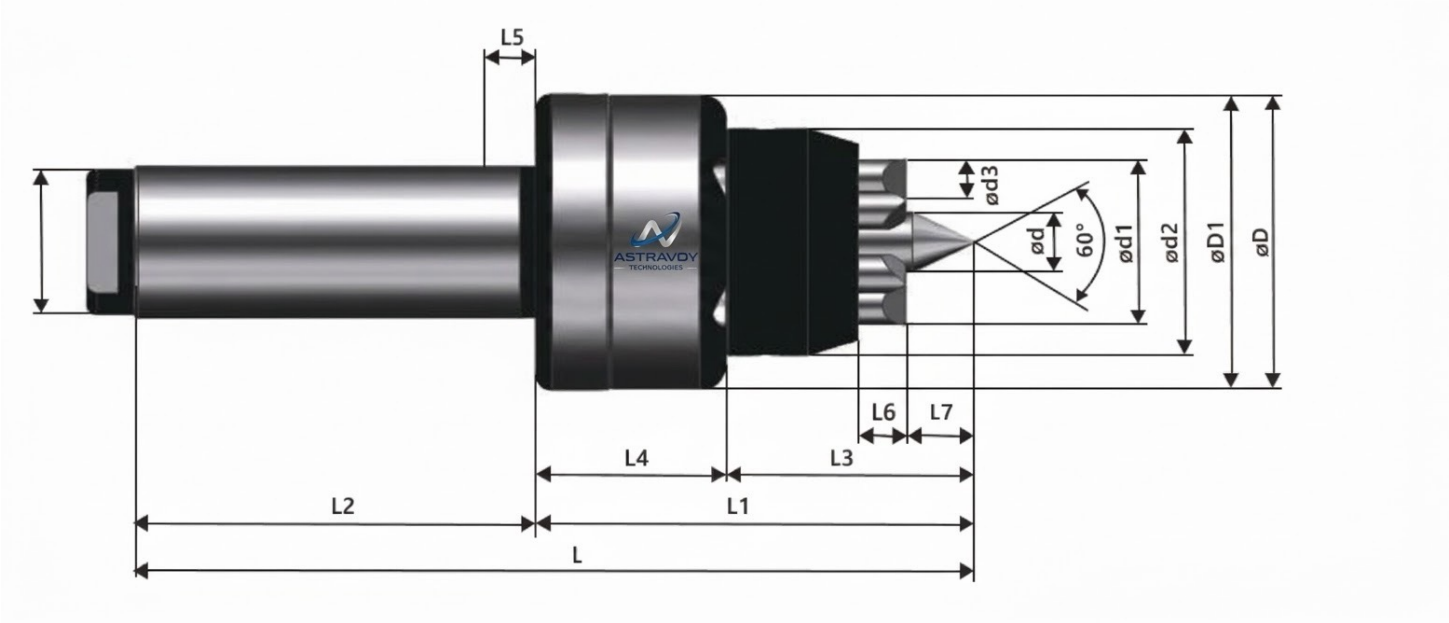

Dimension

Model No	Model	Dimension													Work Size	MAX Weight(kg)
		Φd	Φd1	Φd2	Φd3	Φd4	ΦD	ΦD1	L	L1	L2	L3	L4	L6	L7	
1007010DST	FCDST10	5	17	28	5	35	41.4	41	141.3	56.3	85	31.8	24.5	5	5.3	Φ18~Φ38	55
1007020DST	FCDST20	9	26	38	7	35	52	51.4	148.3	63.8	85	36.8	27	6.5	8.8	Φ27~Φ55	60
1007030DST	FCDST30	14	38	52	9	35	68	67.4	168	83	85	47	36	9	13	Φ39~Φ75	70
1007040DST	FCDST40	18	54	72	14	41	83.5	82.5	177.6	92.6	85	57.6	35	11	15.6	Φ55~Φ100	100
1007050DST	FCDST50	23	78.5	96.5	14	72	108	107	189.5	120.5	69	63.5	57	14	19.5	Φ80~Φ130	150

1.5mm
PIN,POINT

- ▶Reinforced automatic calibration function of cross-section of workpiece
- ▶It automatically corrects the tapered cross section of the workpiece up to 1.5 mm with uniform pressure in all directions
- ▶Due to the improvement of the workpiece clamping function, the life of parts such as PIN and POINT is prolonged, reducing maintenance costs
- ▶More stable clamping enables longer life of tools in use when processing

Face driver parts diagram

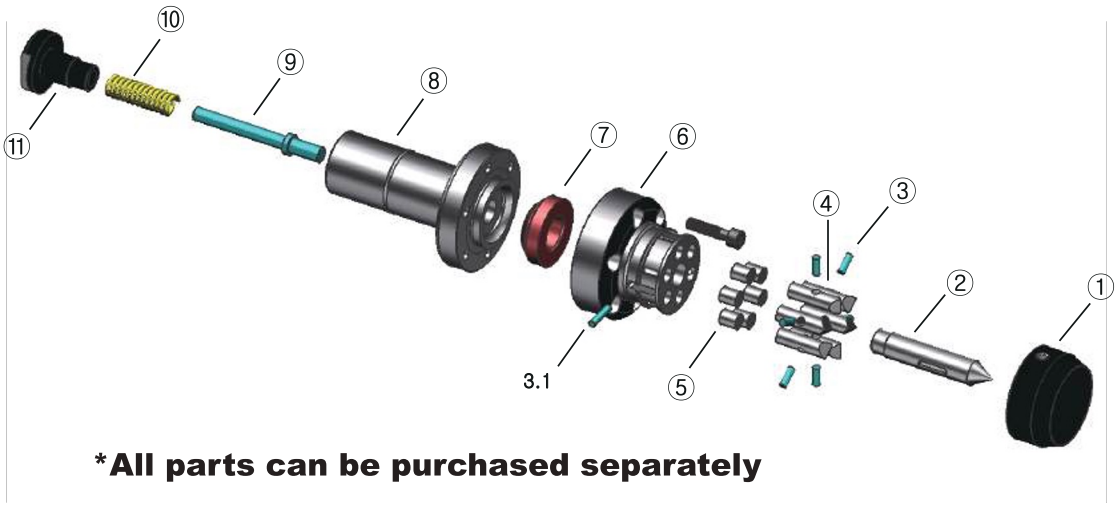

***All parts can be purchased separately**

构成图里的所有配件可以单购买

Dimension

Parts No.	/TYPE	FC10	FC20	FC30	FC40
1	FC COVER	1007010-1	1007020-1	1007030-1	1007040-1
2	FC POINT	1007010-2	1007020-2	1007030-2	1007040-2
3	FC PIN-PIN	1007010-3	1007020-3	1007030-3	1007040-3
3.1	FC POINT-PIN	1007010-3.1	1007020-3.1	1007030-3.1	1007040-3.1
4	FC PIN	1007010-4	1007020-4	1007030-4	1007040-4
5	FC ROLLER	1007010-5	1007020-5	1007030-5	1007040-5
6	FC HEAD	1007010-6	1007020-6	1007030-6	1007040-6
7	FC	1007010-7	1007020-7	1007030-7	1007040-7
8	FC SHANK	1007010-8	1007020-8	1007030-8	1007040-8
9	FC SPRING LODE	1007010-9	1007020-9	1007030-9	1007040-9
10	FC SPRING	1007010-10	1007020-10	1007030-10	1007040-10
11	FC END COVER	1007010-11	1007020-11	1007030-11	1007040-11

Parts No.	/TYPE	FCDST10	FCDST20	FCDST30	FCDST40	FCDST50
1	FC COVER	1007010DST-1	1007020DST-1	1007030DST-1	1007040DST-1	1007050DST-1
2	FC POINT	1007010DST-2	1007020DST-2	1007030DST-2	1007040DST-2	1007050DST-2
3	FC PIN-PIN	1007010DST-3	1007020DST-3	1007030DST-3	1007040DST-3	1007050DST-3
3.1	FC POINT-PIN	1007010DST-3.1	1007020DST-3.1	1007030DST-3.1	1007040DST-3.1	1007050DST-3.1
4	FC PIN	1007010DST-4	1007020DST-4	1007030DST-4	1007040DST-4	1007050DST-4
5	FC ROLLER	1007010DST-5	1007020DST-5	1007030DST-5	1007040DST-5	1007050DST-5
6	FC HEAD	1007010DST-6	1007020DST-6	1007030DST-6	1007040DST-6	1007050DST-6
7	FC DISK	1007010DST-7	1007020DST-7	1007030DST-7	1007040DST-7	1007050DST-7
8	FC SHANK	1007010DST-8	1007020DST-8	1007030DST-8	1007040DST-8	1007050DST-8
9	FC SPRING LODE	1007010DST-9	1007020DST-9	1007030DST-9	1007040DST-9	1007050DST-9
10	FC SPRING	1007010DST-10	1007020DST-10	1007030DST-10	1007040DST-10	1007050DST-10
11	FC END COVER	1007010DST-11	1007020DST-11	1007030DST-11	1007040DST-11	1007050DST-11



(錐度型)



(使用刀柄型)



FC TYPE PIN

(FC TYPE PIN 随着装夹方向 可调工作方向)

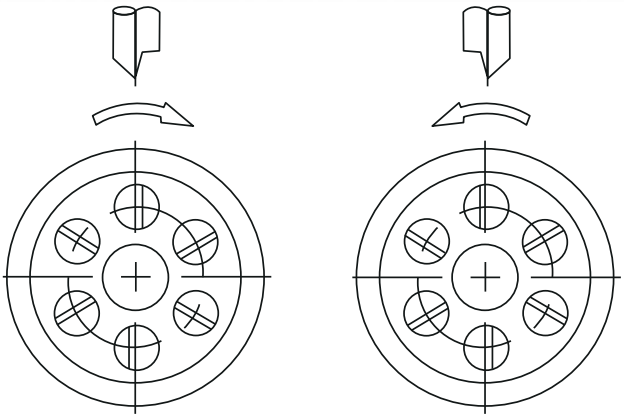

SIZE

(FACE DRIVER 中心孔尺寸)

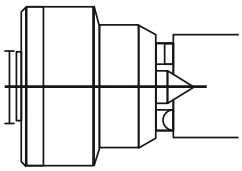

NO	MODEL	CENTER HOLE DIA LIMITS	
		MIN(Φ)	MAX(Φ)
1	FC10	2	4
2	FC20	4	8
3	FC30	6	12
4	FC40	8	16

(装夹错误的 FACE DRIVER)

(中心孔大的情况下)

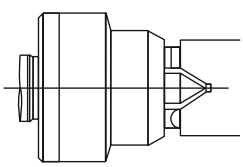

(中心孔小的情况下)

