SN Series

CNC standard turning center most popular.



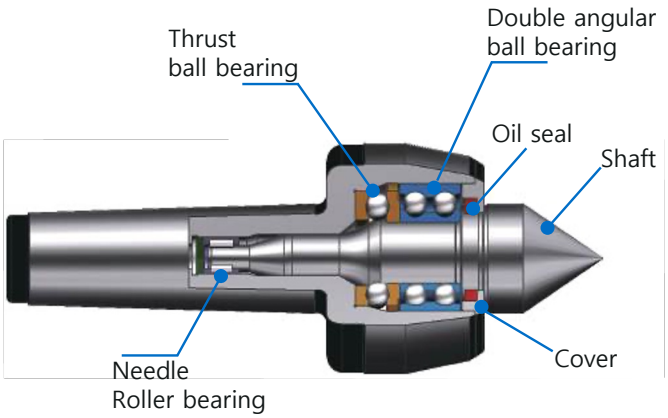

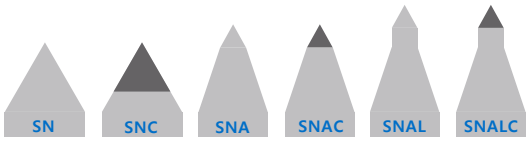

Center Point type

OIL SEAL

RUN OUT 0.003mm

- Prevention the:enetration of cutting oil and extraneous bodies by using the special oil seal
- High degree of accuracy of rotation and high durability by using the triplexed bearing structure as high degree of precision
- Run out - Max 0.003mm

- 采用特殊油封，有效防止切削液和粉尘进入
- 采用高精度三重轴承结构，回转精度高，寿命长
- 跳动公差为0.003mm以内

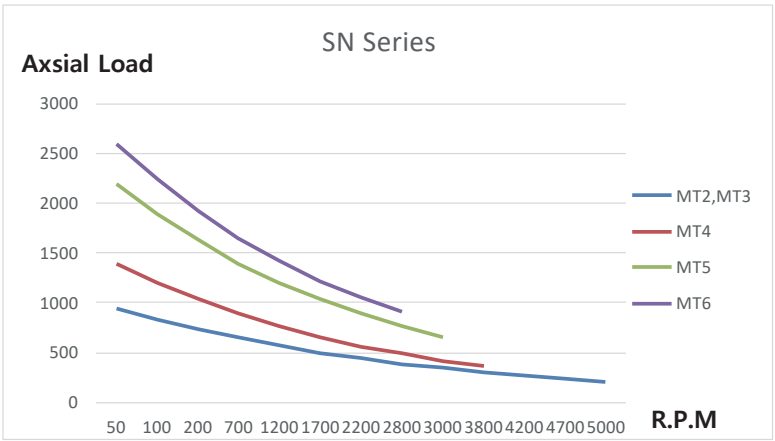

Astra-SN

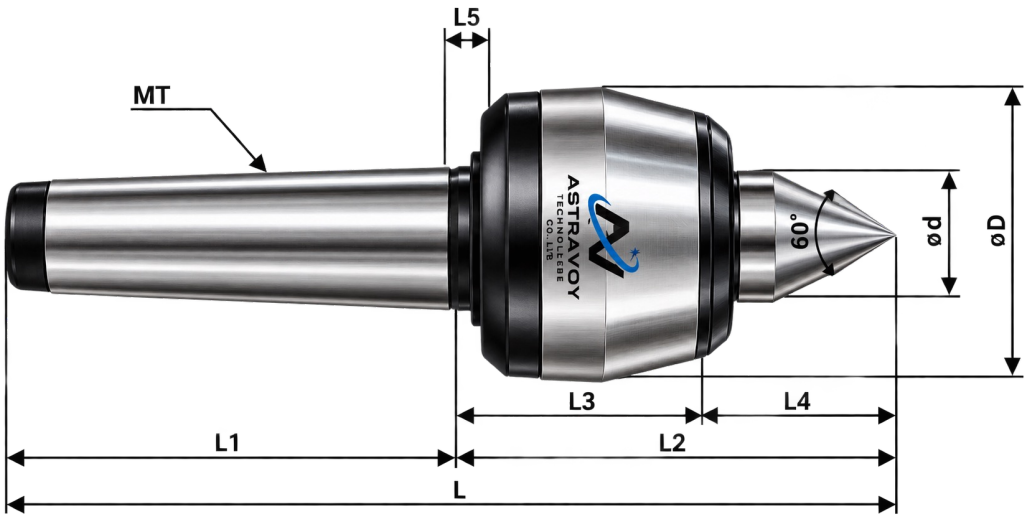

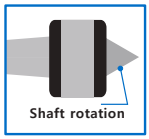



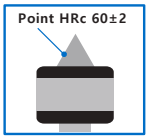



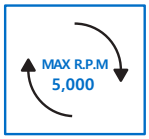

Dimension

Model No	Model	Morse Taper	Dimension								MAX Weight(kg)	MAX R.P.M	MAX Run Out(㎜)
			ΦD	Φd	L	L1	L2	L3	L4	L5			
1001002	2SN	MT2	49	25	140	68	72	42	30	6	500	5,000	0.003
1001003	3SN	MT3	49	25	157	85	72	42	30	6	500	5,000	0.003
1001004	4SN	MT4	66	31.4	201	108	93	53	40	8	800	3,800	0.003
1001005	5SN	MT5	83	40	251	136	115	65	50	8	2,000	3,000	0.003
1001006	6SN	MT6	105	50	324	189	135	75	60	10	3,500	2,800	0.003

HRC 58~62

▶Heat treatment hardness of center axis point HRC 58~62

▶顶尖头的热处理硬度为 HRC 58-62

Maximum R.P.M based on Workpiece weight.

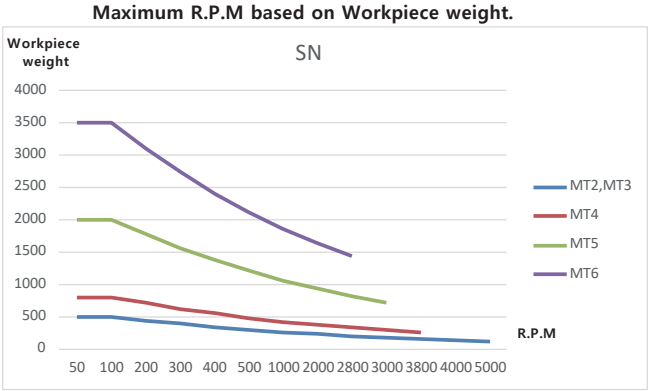

Astra-SNC

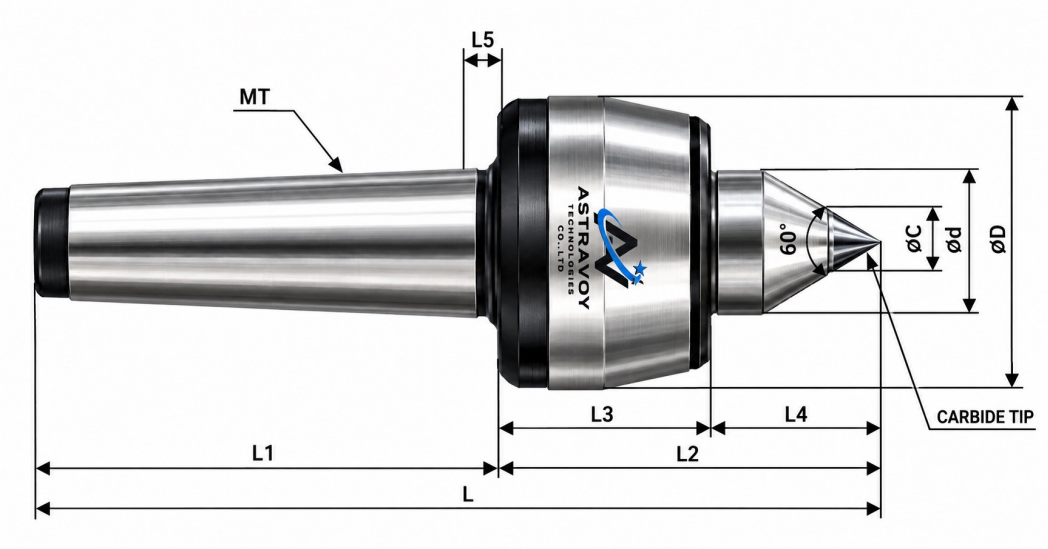

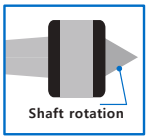









Dimension

Model No	Model	Morse Taper	Dimension									MAX Weight(kg)	MAX R.P.M	MAX Run Out(㎜)
			ΦD	Φd	L	L1	L2	L3	L4	L5	ΦC			
1001012	2SNC	MT2	49	25	140	68	72	42	30	6	10	500	5,000	0.003
1001013	3SNC	MT3	49	25	157	85	72	42	30	6	10	500	5,000	0.003
1001014	4SNC	MT4	66	31.4	201	108	93	53	40	8	14	800	3,800	0.003
1001015	5SNC	MT5	83	40	251	136	115	65	50	8	18	2,000	3,000	0.003
1001016	6SNC	MT6	105	50	324	189	135	75	60	10	30	3,500	2,800	0.003

HRA90~91

- ▶Center axis point Carbide type
- ▶Carbide hardness HRA 90~91
- ▶顶尖头部镶入硬质合金，耐磨性显著提高
- ▶硬质合金硬度为 HRA 90-91

Maximum R.P.M based on Workpiece weight.

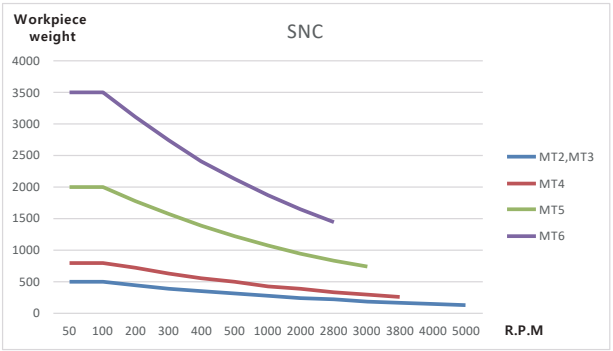

Astra-SNA

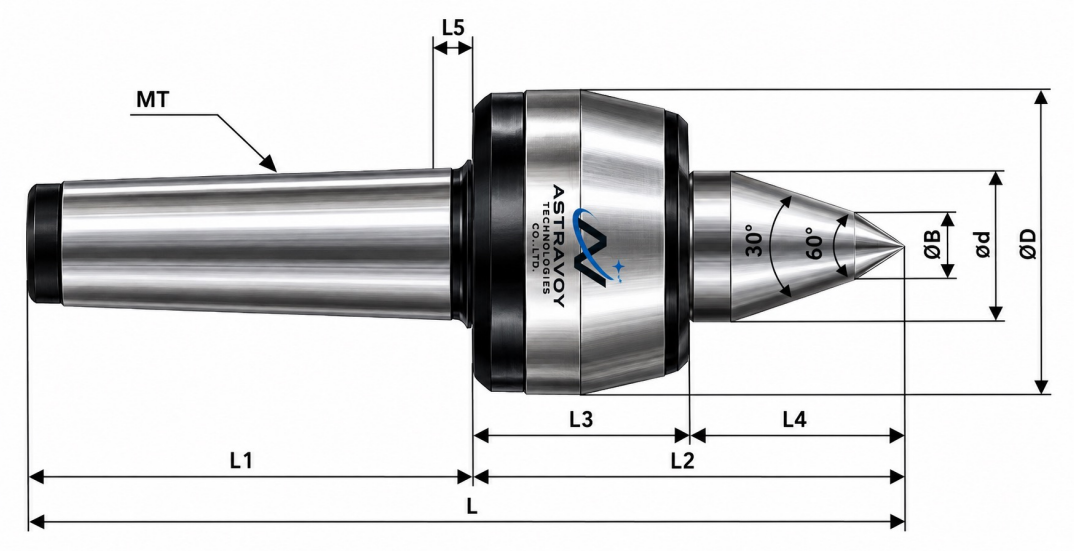

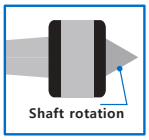



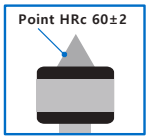



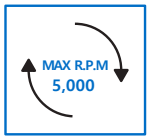

Dimension

Model No	Model	Morse Taper	Dimension									MAX Weight(kg)	MAX R.P.M	MAX Run Out(㎜)
			ΦD	Φd	L	L1	L2	L3	L4	L5	ΦB			
1001022	2SNA	MT2	49	25	155	68	87	42	45	6	10	500	5,000	0.003
1001023	3SNA	MT3	49	25	172	85	87	42	45	6	10	500	5,000	0.003
1001024	4SNA	MT4	66	31.4	214	108	106	53	53	8	14	500	3,800	0.003
1001025	5SNA	MT5	83	40	266	136	130	65	65	8	16	1,500	3,000	0.003
1001026	6SNA	MT6	105	50	342	189	153	75	78	10	18	2,500	2,800	0.003

2
HRC 58~62

- Two-level angular shape of the center axis point to minimize interference during processing
- Heat treatment hardness of center shaft HRC 58~62
- 顶尖头部采用两段锥度设计，有效减少干涉
- 顶尖头的热处理硬度为 HRC 58-62

Maximum R.P.M based on Workpiece weight.

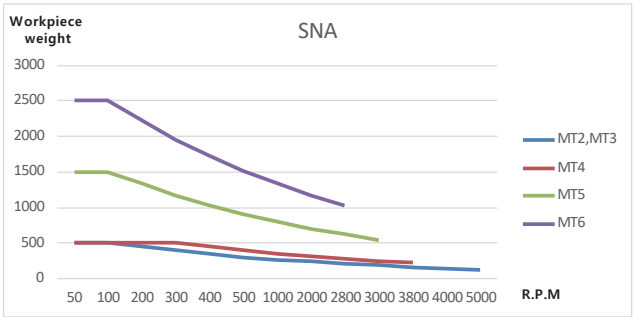

Astra-SNAC

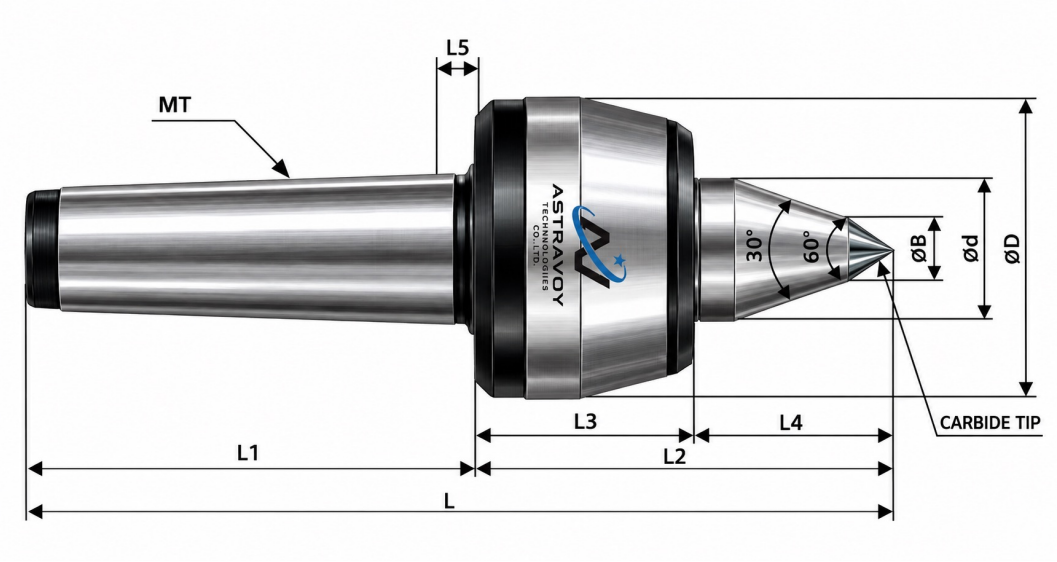

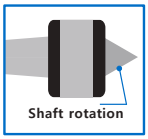



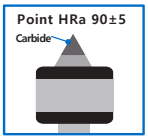





Dimension

Model No	Model	Morse Taper	Dimension									MAX Weight(kg)	MAX R.P.M	MAX Run Out(㎜)
			ΦD	Φd	L	L1	L2	L3	L4	L5	ΦB			
1001032	2SNAC	MT2	49	25	155	68	87	42	45	6	10	500	5,000	0.003
1001033	3SNAC	MT3	49	25	172	85	87	42	45	6	10	500	5,000	0.003
1001034	4SNAC	MT4	66	31.4	214	108	106	53	53	8	14	500	3,800	0.003
1001035	5SNAC	MT5	83	40	266	136	130	65	65	8	16	1,500	3,000	0.003
1001036	6SNAC	MT6	105	50	342	189	153	75	78	10	18	2,500	2,800	0.003

2

HRA 90~91

- ▶Two-level angular shape of the center axis point to minimize interference during processing
- ▶Center axis point Carbide type
- ▶Carbide hardness HRA90~91
- ▶顶尖头部采用两段锥度设计，有效减少干涉
- ▶顶尖头部镶入硬质合金，耐磨性显著提高
- ▶硬质合金硬度为 HRA 90-91

Maximum R.P.M based on Workpiece weight.

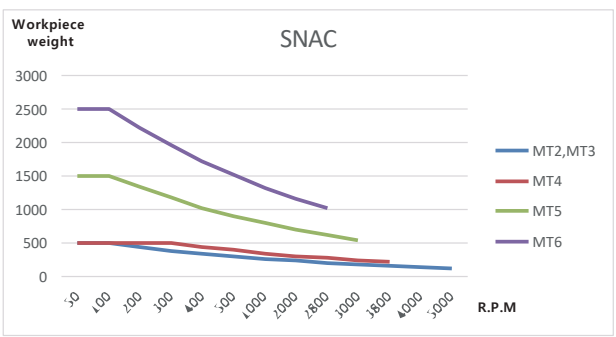

Astra-SNAL / Astra -SNALC

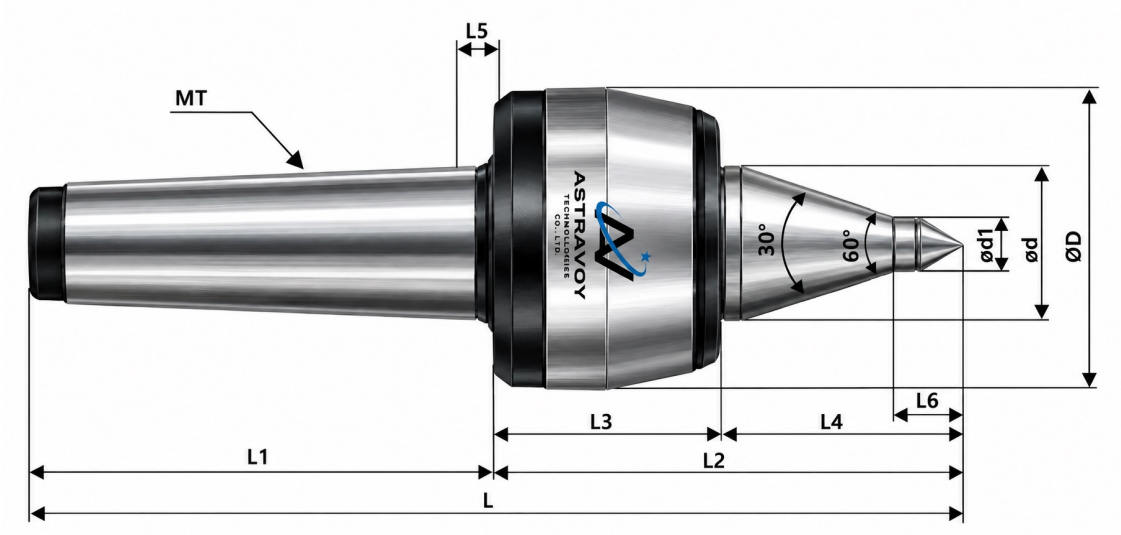

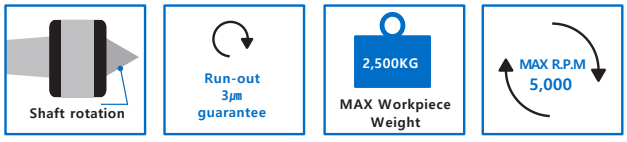

Dimension

Model No	Model	Morse Taper	Dimension										MAX Weight(kg)	MAX R.P.M	MAX Run Out(㎜)
			ΦD	Φd	L	L1	L2	L3	L4	L5	L6	Φd1			
1001042	2SNAL	MT2	49	25	160	68	92	42	50	6	17	10	500	5,000	0.003
1001043	3SNAL	MT3	49	25	177	85	92	42	50	6	17	10	500	5,000	0.003
1001044	4SNAL	MT4	66	31.4	221	108	113	53	60	8	18	12	500	3,800	0.003
1001045	5SNAL	MT5	83	40	276	136	140	65	75	8	17.5	12	1,500	3,000	0.003
1001046	6SNAL	MT6	105	50	359	189	170	75	95	10	25	14	2,500	2,800	0.003
1001052	2SNALC	MT2	49	25	160	68	92	42	50	6	17	10	500	5,000	0.003
1001053	3SNALC	MT3	49	25	177	85	92	42	50	6	17	10	500	5,000	0.003
1001054	4SNALC	MT4	66	31.4	221	108	113	53	60	8	18	12	500	3,800	0.003
1001055	5SNALC	MT5	83	40	276	136	140	65	75	8	17.5	12	1,500	3,000	0.003
1001056	6SNALC	MT6	105	50	359	189	170	75	95	10	25	14	2,500	2,800	0.003

3
HRC 58~62
HRA 90~91

- ▶3-level angular shape of the center axis point to minimize interference during processing
- ▶Heat treatment hardness of center shaft HRC 58~62
- ▶Carbide hardness HRA 90~91
- ▶最大限度减少刀具干涉
- ▶顶尖头的热处理硬度为 HRC 58-62
- ▶硬质合金硬度为 HRA 90-91

Maximum R.P.M based on Workpiece weight.

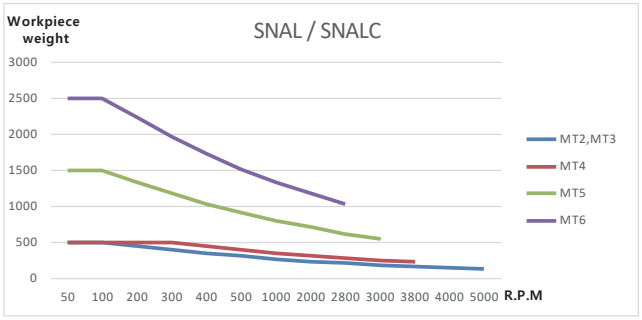

LP Series

ECO Version



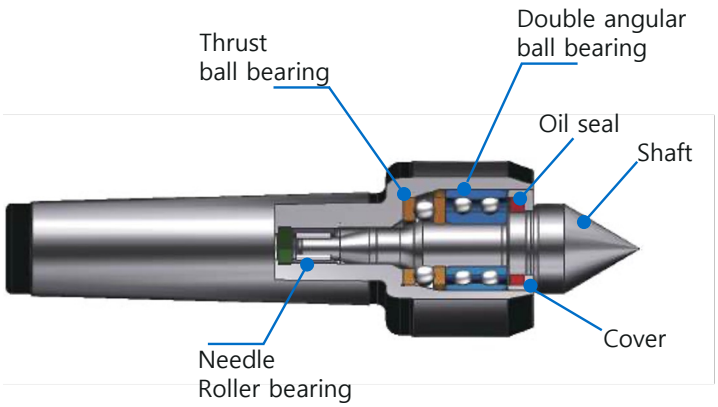

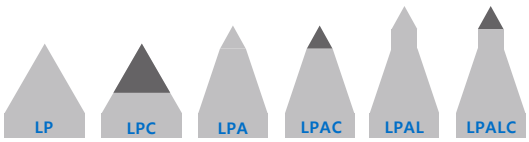

Center Point type

CNC
OIL SEAL
3

- ▶ Low cost rotation center for CNC machining
- ▶ Special oil seal adopted to prevent penetration by coolant and foreign matter
- ▶ Triplexed bearing structure as high degree of precision

- ▶ CNC车床经济型顶尖
- ▶ 采用特殊油封，有效防止切削液和异物质进入
- ▶ 采用高精度三重轴承结构

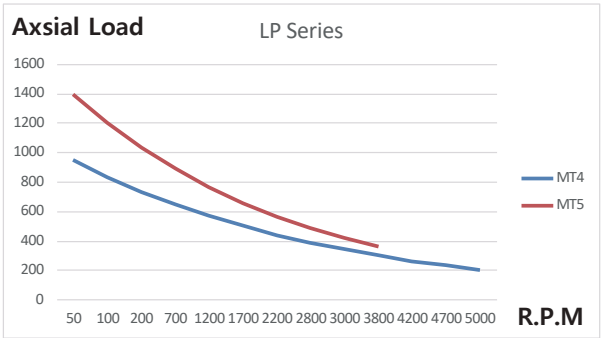

Astra-LP

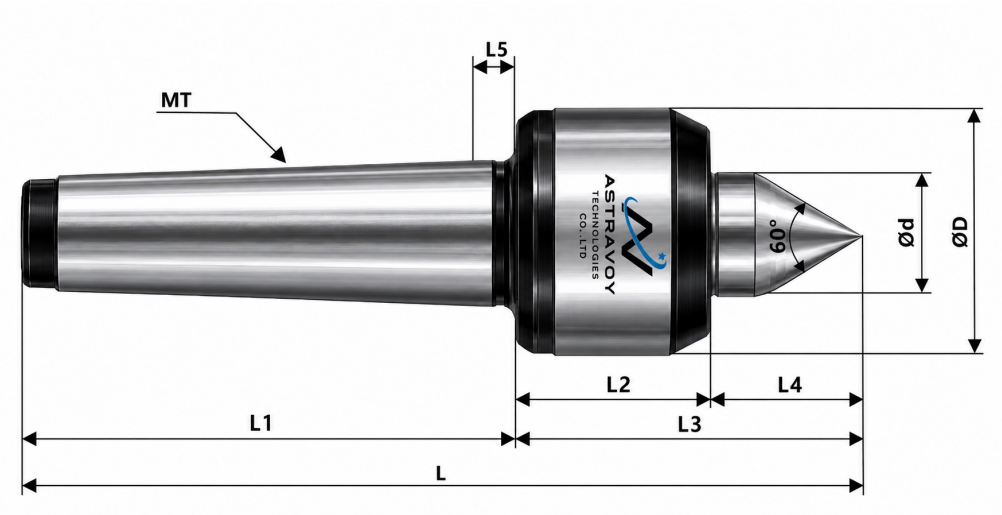

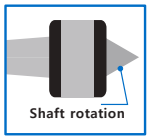



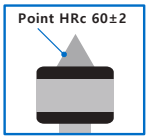



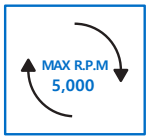

Dimension

Model No	Model	Morse Taper	Dimension								MAX Weight(kg)	MAX R.P.M	MAX Run Out(㎜)
			ΦD	Φd	L	L1	L2	L3	L4	L5			
1014004	4LP	MT4	49	25	180	108	42	72	30	6.5	500	5,000	0.003
1014005	5LP	MT5	66	31.4	229	136	53	93	40	6.5	800	3,800	0.003

HRC 58~62

▶Heat treatment hardness of center axis point HRC 58~62

▶顶尖头的热处理硬度为 HRC 58-62

Maximum R.P.M based on Workpiece weight.

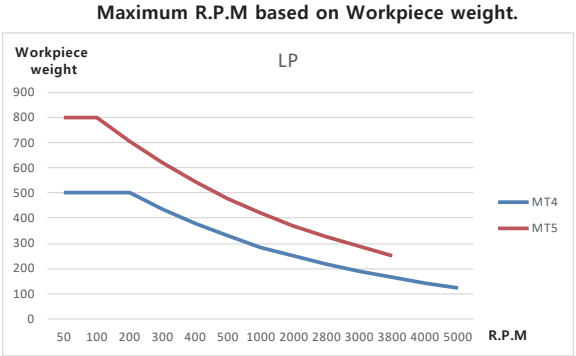

Astra-LPC

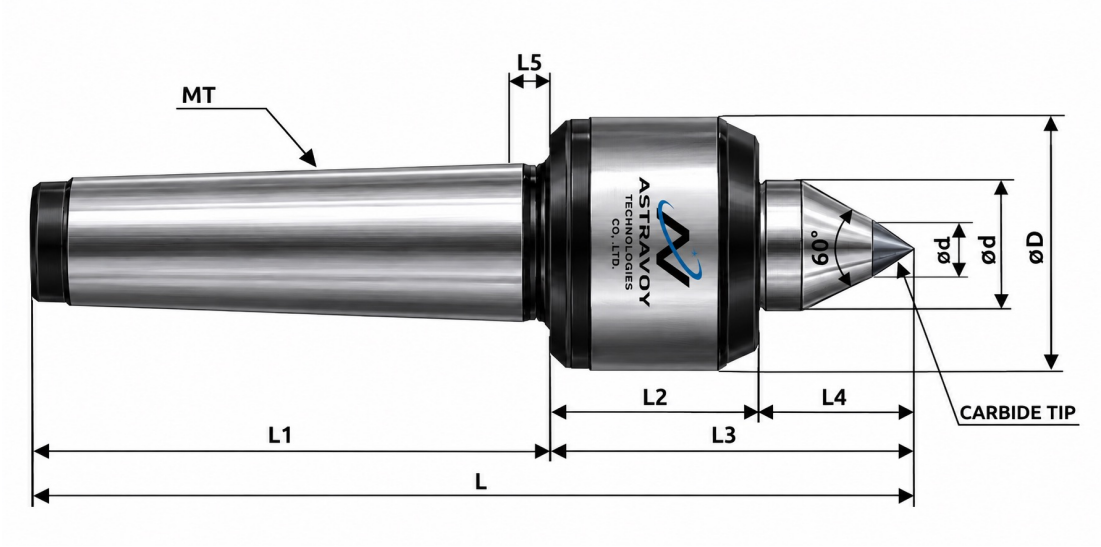



Dimension

Model No	Model	Morse Taper	Dimension									MAX Weight(kg)	MAX R.P.M	MAX Run Out(㎜)
			ΦD	Φd	L	L1	L2	L3	L4	L5	ΦC			
1014014	4LPC	MT4	49	25	180	108	42	72	30	6.5	10	500	5,000	0.003
1014015	5LPC	MT5	66	31.4	229	136	53	93	40	6.5	14	800	3,800	0.003

HRA 90~91

- ▶Center axis point Carbide type
- ▶Carbide hardness HRA 90~91
- ▶顶尖头部镶入硬质合金，耐磨性显著提高
- ▶硬质合金硬度为 HRA 90-91

Maximum R.P.M based on Workpiece weight.

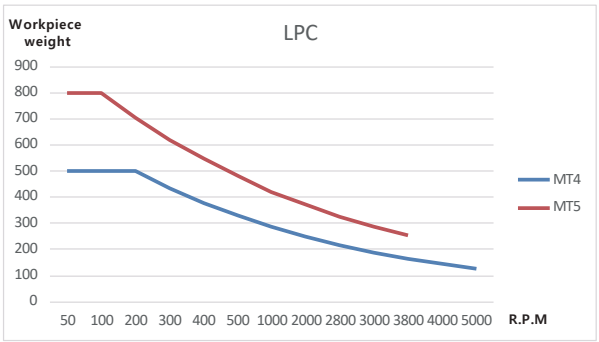

Astra-LPA

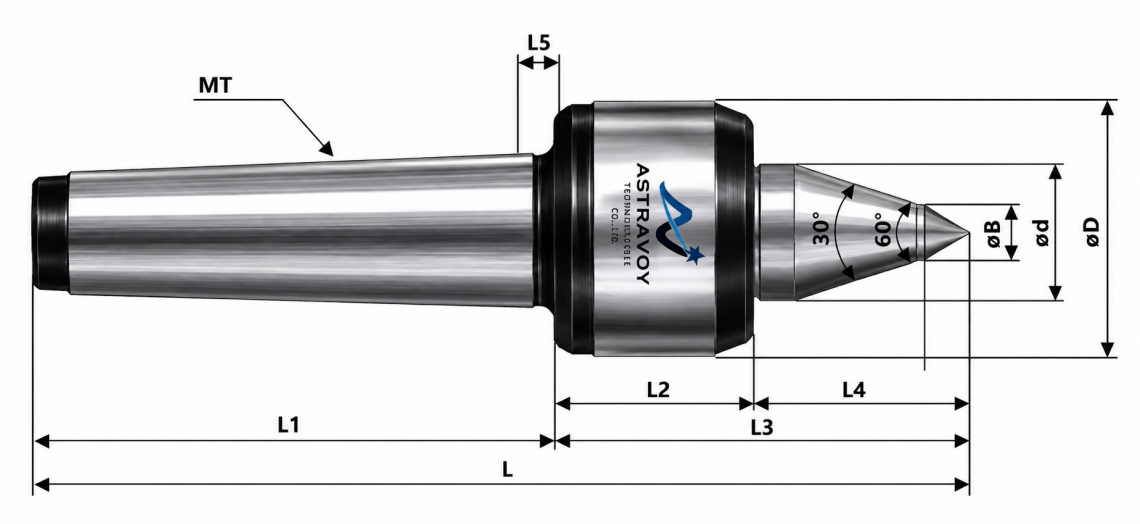

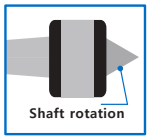



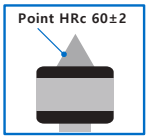





Dimension

Model No	Model	Morse Taper	Dimension									MAX Weight(kg)	MAX R.P.M	MAX Run Out(mm)
			ΦD	Φd	L	L1	L2	L3	L4	L5	ΦB			
1014024	4LPA	MT4	49	25	195	108	42	87	45	6.5	10	500	5,000	0.003
1014025	5LPA	MT5	66	31.4	242	136	53	106	53	6.5	14	500	3,800	0.003

2
HRC 58~62

▶Two-level angular shape of the center axis point to minimize interference during processing
▶Heat treatment hardness of center shaft HRC 58~62
▶顶尖头部采用两段锥度设计，有效减少干涉
▶顶尖头的热处理硬度为 HRC 58-62

Maximum R.P.M based on Workpiece weight.

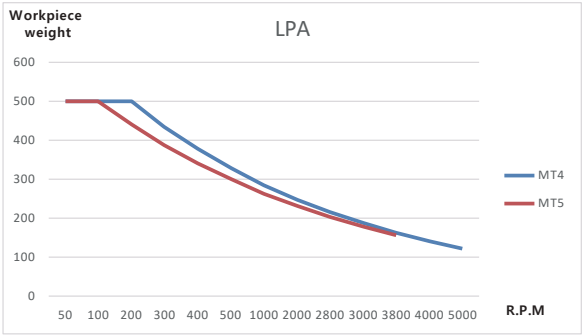

Astra-LPAC

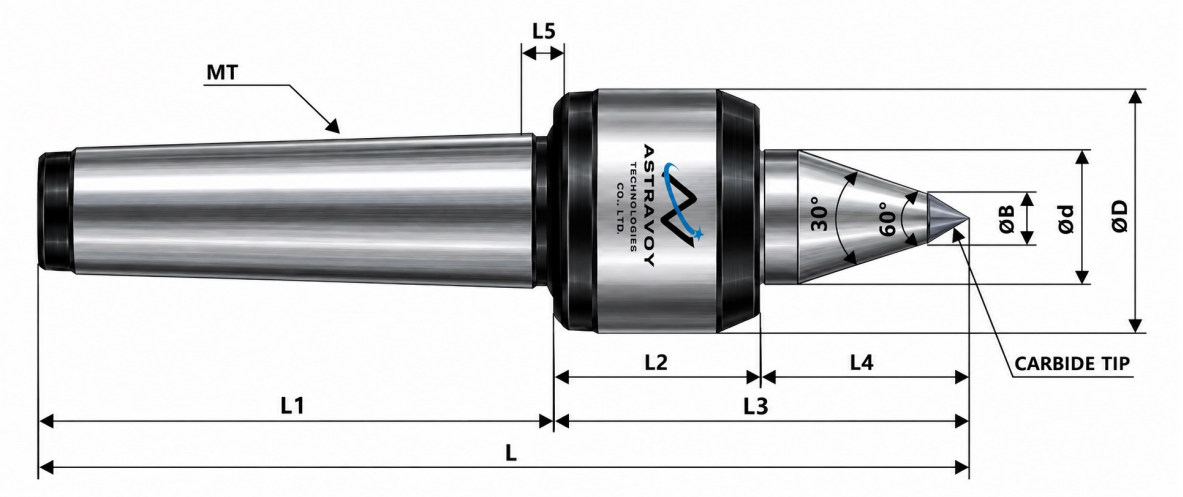

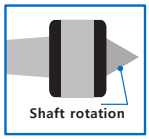









Dimension

Model No	Model	Morse Taper	Dimension									MAX Weight(kg)	MAX R.P.M	MAX Run Out(㎜)
			ΦD	Φd	L	L1	L2	L3	L4	L5	ΦB			
1014034	4LPAC	MT4	49	25	195	108	42	87	45	6.5	10	500	5,000	0.003
1014035	5LPAC	MT5	66	31.4	242	136	53	106	53	6.5	14	500	3,800	0.003

2

HRA 90~91

- ▶Two-level angular shape of the center axis point to minimize interference during processing
- ▶Center axis point Carbide type
- ▶Carbide hardness HRA 90~91
- ▶顶尖头部采用两段锥度设计，有效减少干涉
- ▶顶尖头部镶入硬质合金，耐磨性显著提高
- ▶硬质合金硬度为 HRA 90-91

Maximum R.P.M based on Workpiece weight.

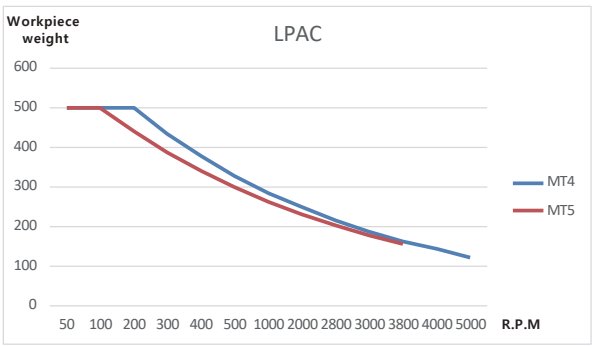

Astra-LPAL / Astra-LPALC

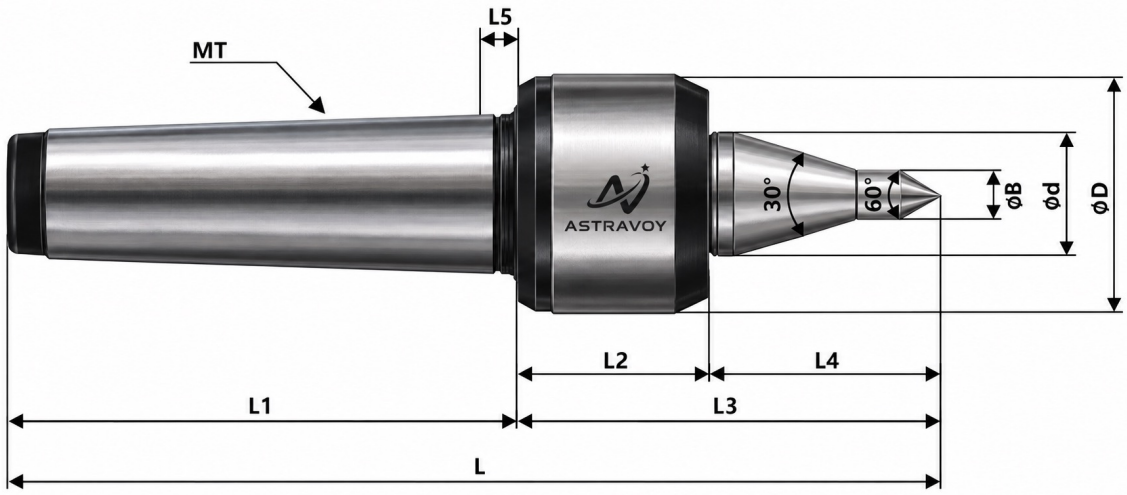

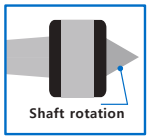







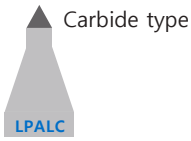

Dimension

Model No	Model	Morse Taper	Dimension										MAX Weight(kg)	MAX R.P.M	MAX Run Out(㎜)
			ΦD	Φd	L	L1	L2	L3	L4	L5	L6	ΦB			
1014044	4LPAL	MT4	49	25	200	108	42	92	50	6.5	17	10	500	5,000	0.003
1014045	5LPAL	MT5	66	31.4	249	136	53	113	60	6.5	18	12	500	3,800	0.003
1014054	4LPALC	MT4	49	25	200	108	42	92	50	6.5	17	10	500	5,000	0.003
1014055	5LPALC	MT5	66	31.4	249	136	53	113	60	6.5	18	12	500	3,800	0.003

3
HRC 58~62
HRA 90~91

- ▶3-level angular shape of the center axis point to minimize interference during processing
- ▶Heat treatment hardness of center shaft HRC 58~62
- ▶Carbide hardness HRA 90~91
- ▶最大限度减少刀具干涉
- ▶顶尖头的热处理硬度为 HRC 58-62
- ▶硬质合金硬度为 HRA 90-91

Maximum R.P.M based on Workpiece weight.

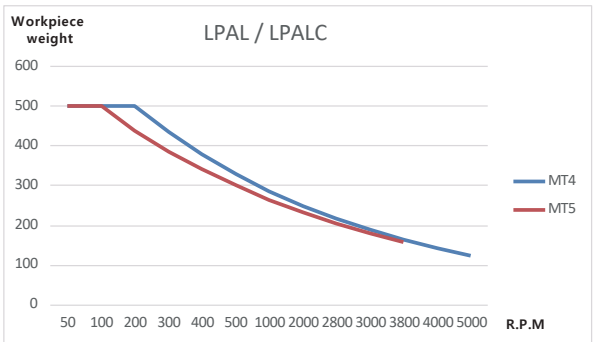

HN Series

Slim body standard center



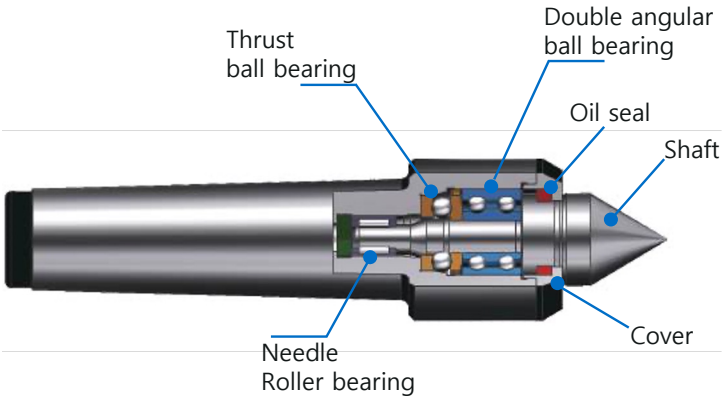

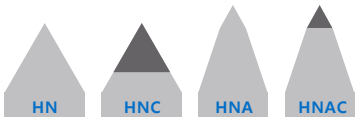

Center Point type

RUN OUT 0.003mm

- ▶ SHAFT Rotating centers that minimizes interference to the tool
- ▶ Special oil seal adopted to prevent penetration by coolant and foreign matter
- ▶ Triplexed bearing structure as high degree of precision
- ▶ Run out - Max 0.003mm

- ▶ 最大限度减少刀具干涉的 旋转型轴顶尖
- ▶ 采用特殊油封，有效防止切削液和异物质进入
- ▶ 采用高精度三重轴承结构
- ▶ 跳动精度0.003以内

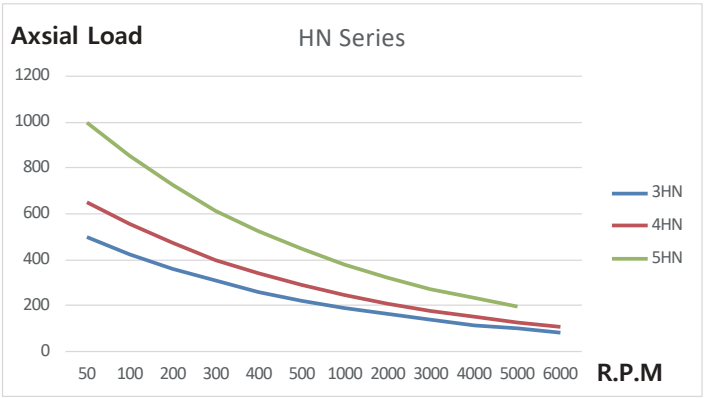

Astra-HN

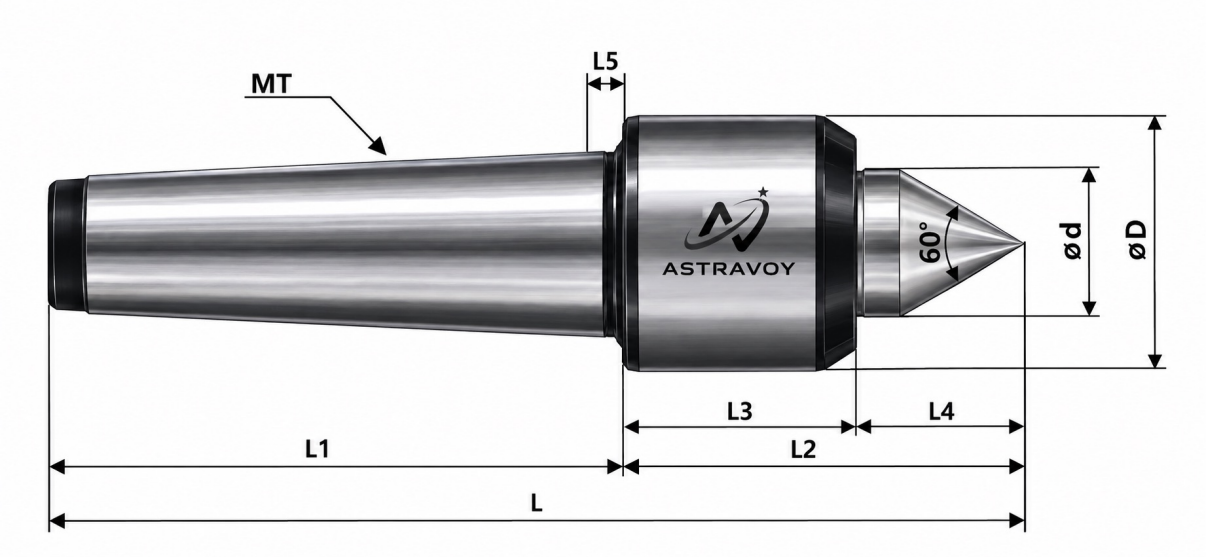

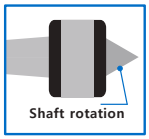



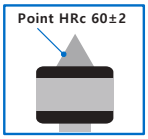





Dimension

Model No	Model	Morse Taper	Dimension								MAX Weight(kg)	MAX R.P.M	MAX Run Out(㎜)
			ΦD	Φd	L	L1	L2	L3	L4	L5			
1013003	3HN	MT3	34	18	146.5	85	61.5	40.5	21	5.3	300	6,000	0.003
1013004	4HN	MT4	42	24	177	108	69	41	28	5.3	400	5,000	0.003
1013005	5HN	MT5	58	31.4	229.3	134.3	95	60	35	6.3	700	4,000	0.003

HRC 58~62

▶Heat treatment hardness of center axis point HRC 58~62

▶顶尖头的热处理硬度为 HRC 58-62

Maximum R.P.M based on Workpiece weight.

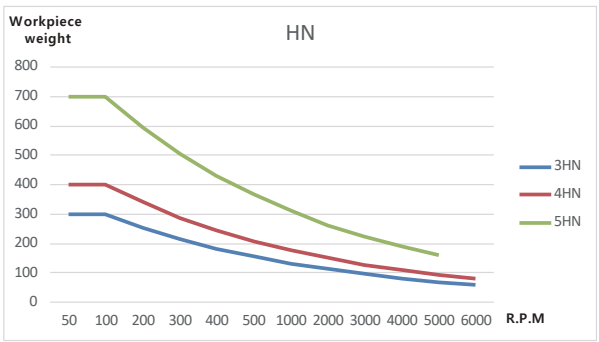

Astra-HNC

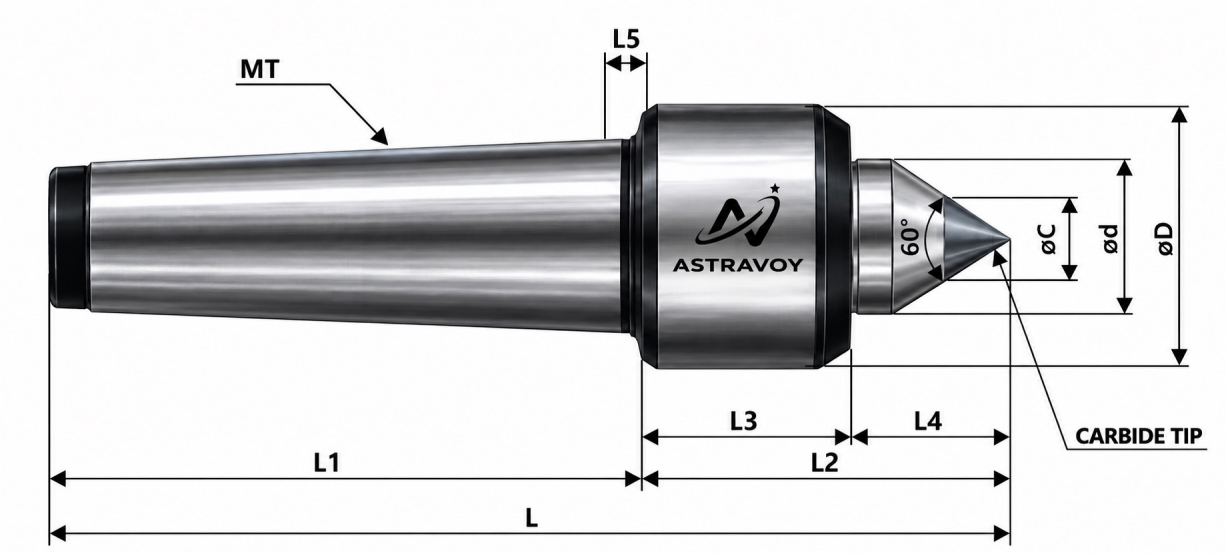

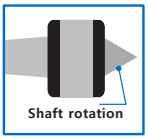



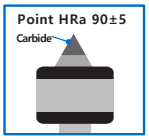



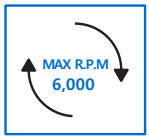

Dimension

Model No	Model	Morse Taper	Dimension									MAX Weight(kg)	MAX R.P.M	MAX Run Out(㎜)
			ΦD	Φd	L	L1	L2	L3	L4	L5	ΦC			
1013013	3HNC	MT3	34	18	146.5	85	61.5	40.5	21	5.3	10	300	6,000	0.003
1013014	4HNC	MT4	42	24	177	108	69	41	28	5.3	14	400	5,000	0.003
1013015	5HNC	MT5	58	31.4	229.3	134.3	95	60	35	6.3	18	700	4,000	0.003

HRA 90~91

- ▶Center axis point Carbide type
- ▶Carbide hardness HRA 90~91
- ▶顶尖头部镶入硬质合金，耐磨性显著提高
- ▶硬质合金硬度为 HRA 90-91

Maximum R.P.M based on Workpiece weight.

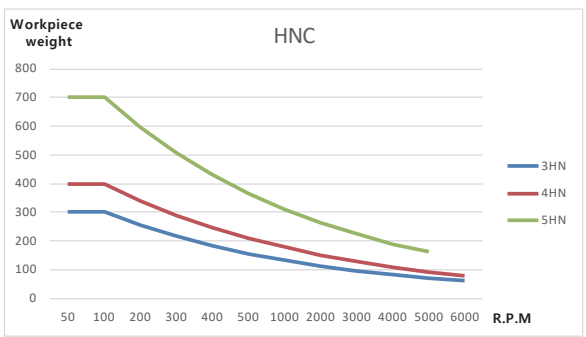

Astra-HNA / Astra-HNAC

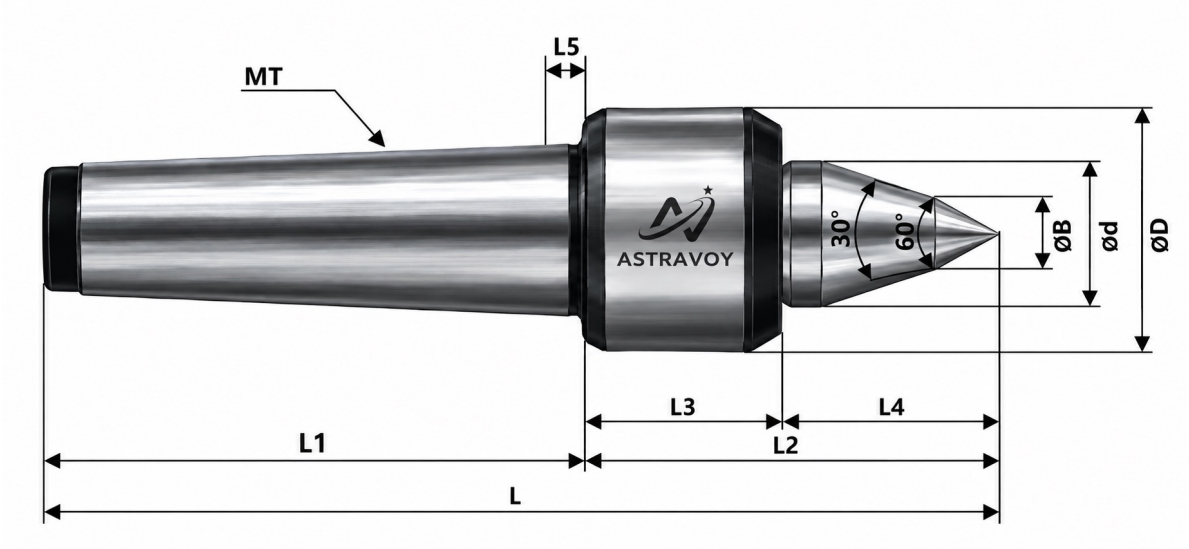

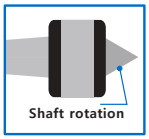







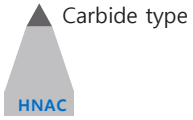

Dimension

Model No	Model	Morse Taper	Dimension									MAX Weight(kg)	MAX R.P.M	MAX Run Out(㎜)
			ΦD	Φd	L	L1	L2	L3	L4	L5	ΦB			
1013023	3HNA	MT3	34	18	152.5	85	67.5	40.5	27	5.3	10	300	6,000	0.003
1013024	4HNA	MT4	42	24	186	108	78	41	37	5.3	12	400	5,000	0.003
1013025	5HNA	MT5	58	31.4	247.3	134.3	113	60	53	6.3	14	700	4,000	0.003
1013033	3HNAC	MT3	34	18	152.5	85	67.5	40.5	27	5.3	10	300	6,000	0.003
1013034	4HNAC	MT4	42	24	186	108	78	41	37	5.3	12	400	5,000	0.003
1013035	5HNAC	MT5	58	31.4	247.3	134.3	113	60	53	6.3	14	700	4,000	0.003

2
HRC 58~62
HRA 90~91

- ▶Two-level angular shape of the center axis point to minimize interference during processing
- ▶Heat treatment hardness of center shaft HRC 58~62
- ▶Carbide hardness HRA 90~91
- ▶顶尖头部采用两段锥度设计，有效减少干涉
- ▶顶尖头的热处理硬度为 HRC 58-62
- ▶硬质合金硬度为 HRA 90-91

Maximum R.P.M based on Workpiece weight.

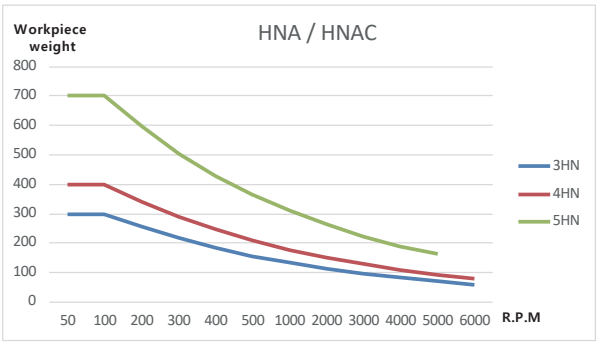

SNN Series

Nut Attachment Standard Center



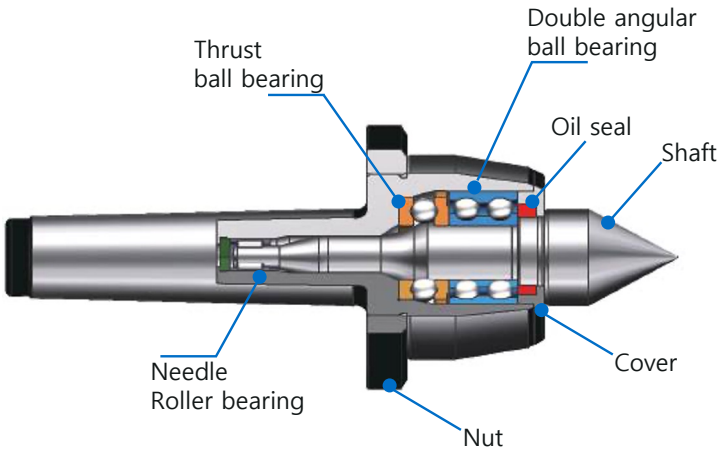

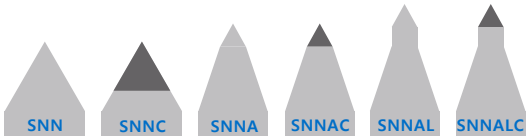

Center Point type

▶
RUN OUT 0.003mm

▶ Prevention the:enetration of cutting oil and extraneous bodies by using the special oil seal
▶ High degree of accuracy of rotation and high durability by using the triplexed bearing structure as high degree of precision
▶ Run out - Max 0.003mm

▶ 采用特殊油封，有效防止切削液和粉尘进入
▶ 采用高精度三重轴承结构，回转精度高，寿命长
▶ 跳动公差为0.003mm以内

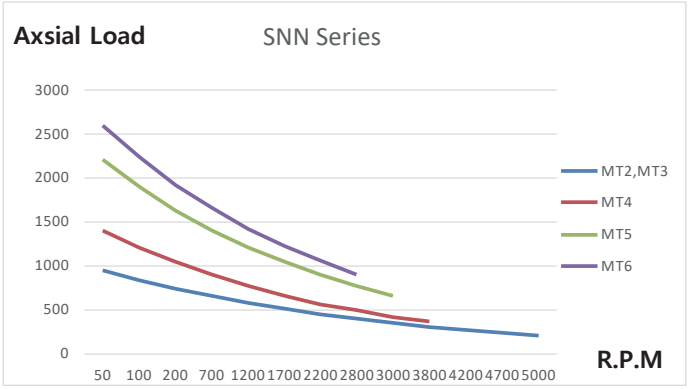

Astra-SNN

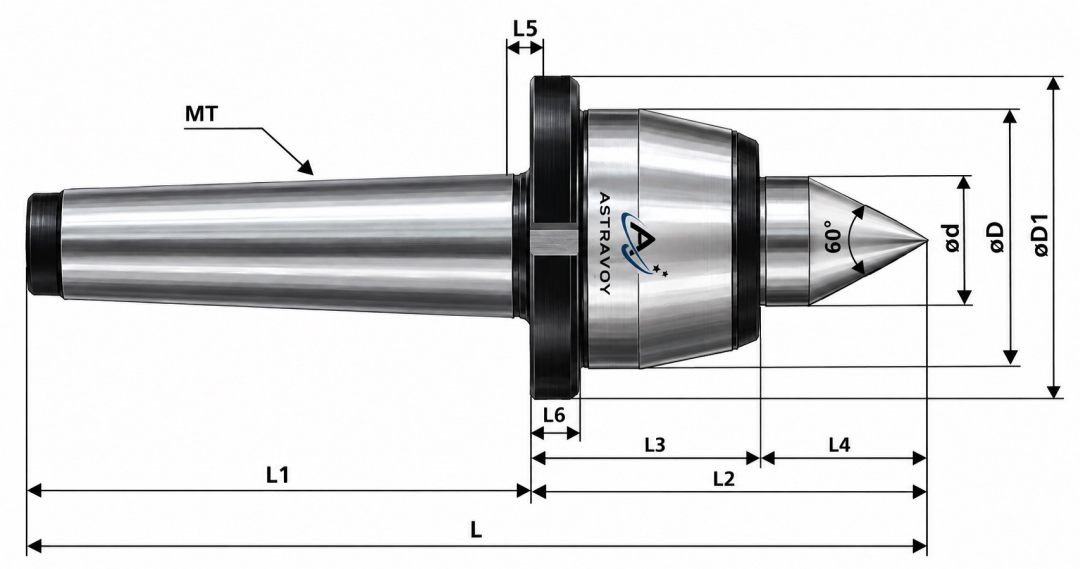

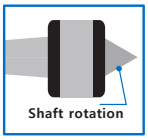



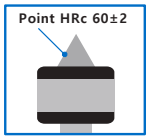



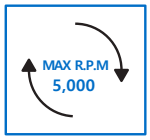

Dimension

Model No	Model	Morse Taper	Dimension									MAX Weight(kg)	MAX R.P.M	MAX Run Out(㎜)
			ΦD	ΦD1	Φd	L	L1	L2	L3	L4	L5	L6			
1001062	2SNN	MT2	49	65	25	140	68	72	42	30	6	10	500	5,000	0.003
1001063	3SNN	MT3	49	65	25	157	85	72	42	30	6	10	500	5,000	0.003
1001064	4SNN	MT4	66	85	31.4	201	108	93	53	40	8	12	800	3,800	0.003
1001065	5SNN	MT5	83	105	40	251	136	115	65	50	8	15	2,000	3,000	0.003
1001066	6SNN	MT6	105	125	50	324	189	135	75	60	10	17	3,500	2,800	0.003

HRC 58~62

- Heat treatment hardness of center axis point HRC 58~62
- Nut type makes it easy to attach and detach from the axis
- 顶尖头的热处理硬度为 HRC 58-62

Maximum R.P.M based on Workpiece weight.

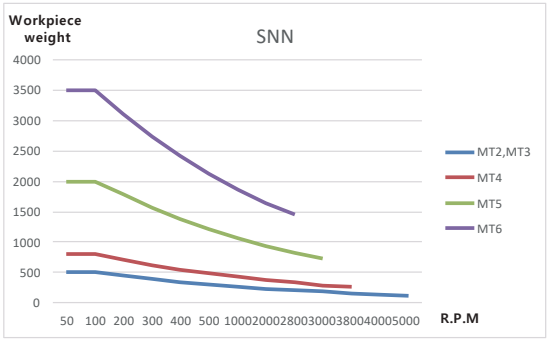

Astra-SNNC

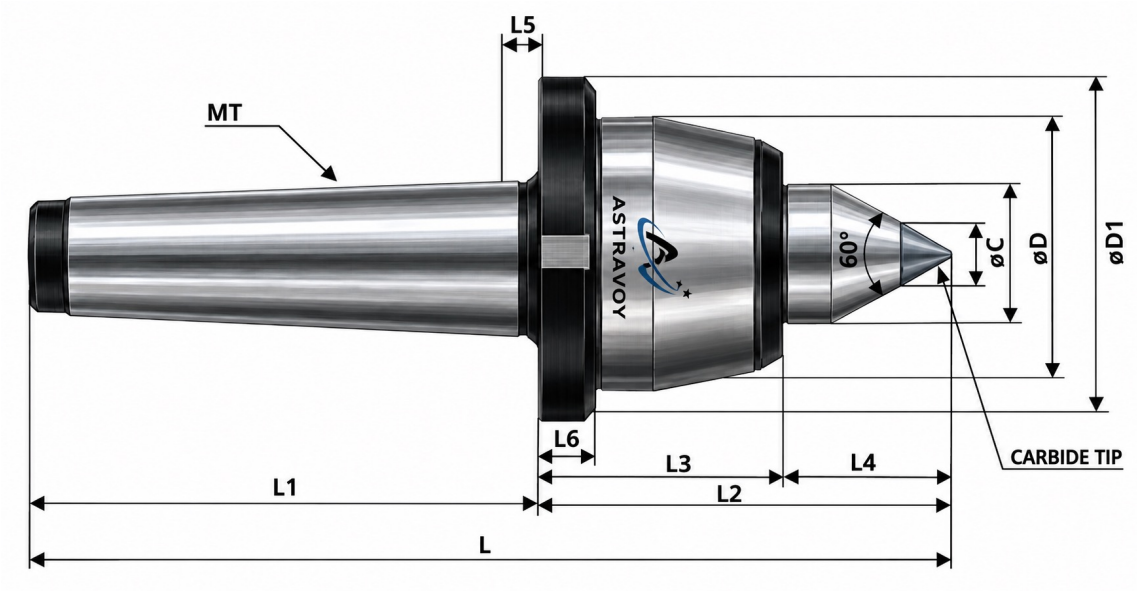

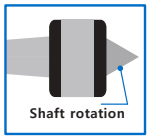



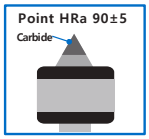





Dimension

Model No	Model	Morse Taper	Dimension										MAX Weight(kg)	MAX R.P.M	MAX Run Out(㎜)
			ΦD	ΦD1	Φd	L	L1	L2	L3	L4	L5	L6	ΦC			
1001072	2SNNC	MT2	49	65	25	140	68	72	42	30	6	10	10	500	5,000	0.003
1001073	3SNNC	MT3	49	65	25	157	85	72	42	30	6	10	10	500	5,000	0.003
1001074	4SNNC	MT4	66	85	31.4	201	108	93	53	40	8	12	14	800	3,800	0.003
1001075	5SNNC	MT5	83	105	40	251	136	115	65	50	8	15	18	2,000	3,000	0.003
1001076	6SNNC	MT6	105	125	50	324	189	135	75	60	10	17	30	3,500	2,800	0.003

HRA 90~91

- ▶Center axis point Carbide type
- ▶Carbide hardness HRA 90~91
- ▶Nut type makes it easy to attach and detach from the axis
- ▶顶尖头部镶入硬质合金，耐磨性显著提高
- ▶硬质合金硬度为 HRA 90-91

Maximum R.P.M based on Workpiece weight.

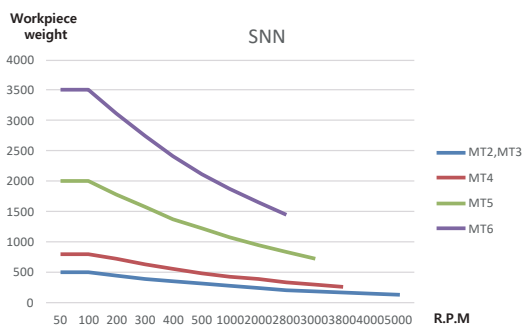

Astra-SNNA

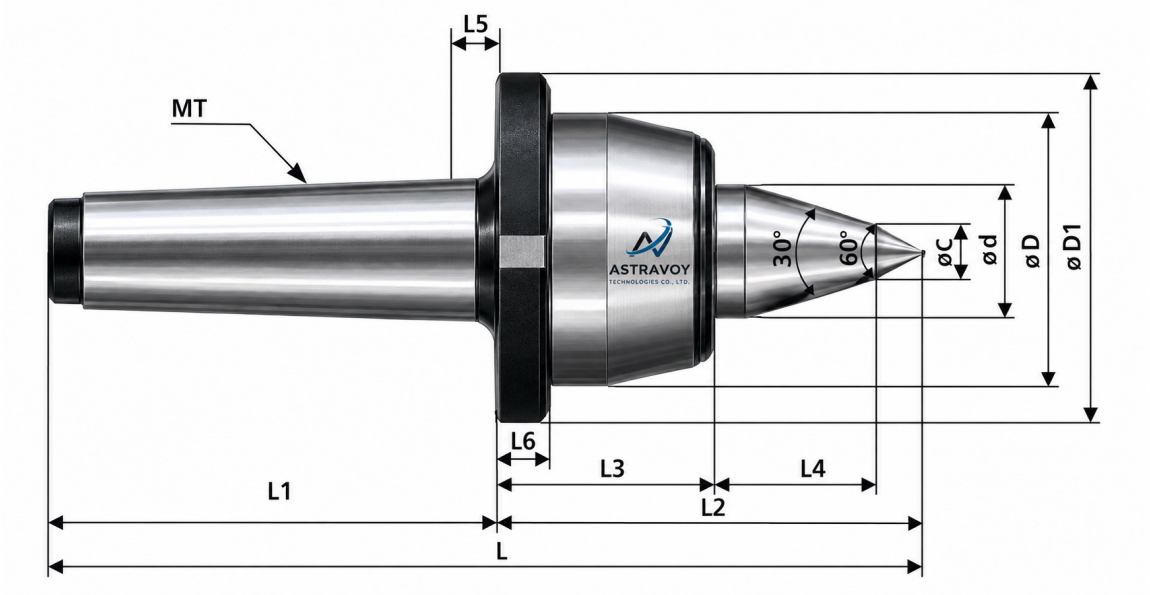

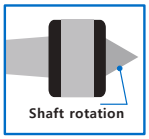



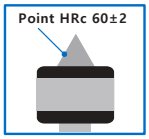



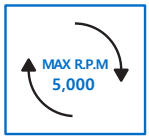

Dimension

Model No	Model	Morse Taper	Dimension										MAX Weight(kg)	MAX R.P.M	MAX Run Out(㎜)
			ΦD	ΦD1	Φd	L	L1	L2	L3	L4	L5	L6	ΦC			
1001072	2SNNA	MT2	49	65	25	140	68	72	42	30	6	10	10	500	5,000	0.003
1001073	3SNNA	MT3	49	65	25	157	85	72	42	30	6	10	10	500	5,000	0.003
1001074	4SNNA	MT4	66	85	31.4	201	108	93	53	40	8	12	14	800	3,800	0.003
1001075	5SNNA	MT5	83	105	40	251	136	115	65	50	8	15	18	2,000	3,000	0.003
1001076	6SNNA	MT6	105	125	50	324	189	135	75	60	10	17	30	3,500	2,800	0.003

2
HRC 58~62

- ▶Nut type makes it easy to attach and detach from the axis
- ▶Two-level angular shape of the center axis point to minimize interference during processing
- ▶Heat treatment hardness of center shaft HRC 58~62
- ▶顶尖头部采用两段锥度设计，有效减少干涉
- ▶顶尖头的热处理硬度为 HRC 58-62

Maximum R.P.M based on Workpiece weight.

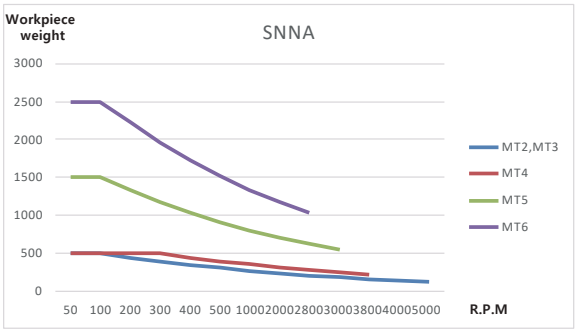

Astra-SNNAC

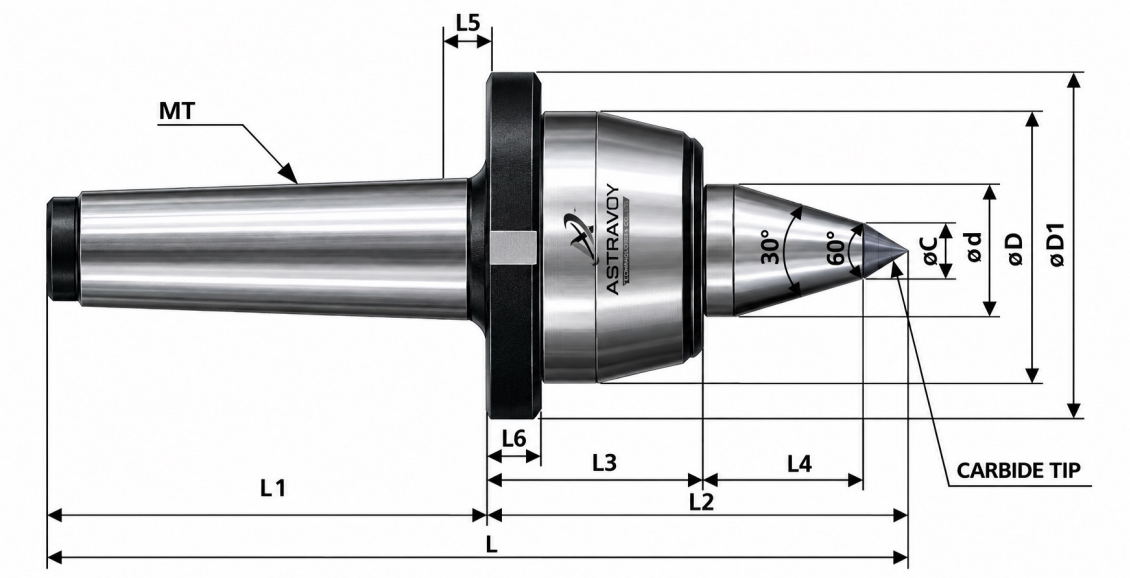

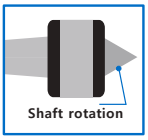









Dimension

Modle No	Model	Morse Taper	Dimension										MAX Weight(kg)	MAX R.P.M	MAX Run Out(㎜)
			ΦD	ΦD1	Φd	L	L1	L2	L3	L4	L5	L6	ΦC			
1001072	2SNNAC	MT2	49	65	25	140	68	72	42	30	6	10	10	500	5,000	0.003
1001073	3SNNAC	MT3	49	65	25	157	85	72	42	30	6	10	10	500	5,000	0.003
1001074	4SNNAC	MT4	66	85	31.4	201	108	93	53	40	8	12	14	800	3,800	0.003
1001075	5SNNAC	MT5	83	105	40	251	136	115	65	50	8	15	18	2,000	3,000	0.003
1001076	6SNNAC	MT6	105	125	50	324	189	135	75	60	10	17	30	3,500	2,800	0.003

2

HRA 90~91

- ▶Nut type makes it easy to attach and detach from the axis
- ▶Two-level angular shape of the center axis point to minimize interference during processing
- ▶Center axis point Carbide type
- ▶Carbide hardness HRA 90~91
- ▶顶尖头部采用两段锥度设计，有效减少干涉
- ▶顶尖头部镶入硬质合金，耐磨性显著提高
- ▶硬质合金硬度为 HRA 90-91

Maximum R.P.M based on Workpiece weight.

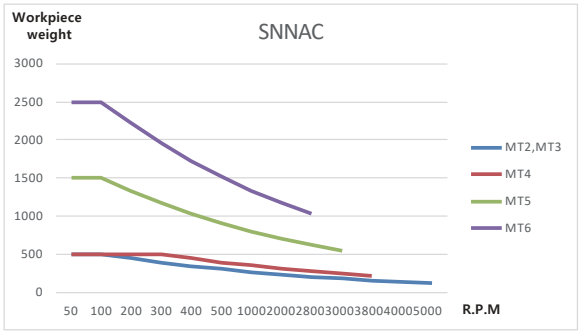

Astra-SNNAL / Astra-SNNALC

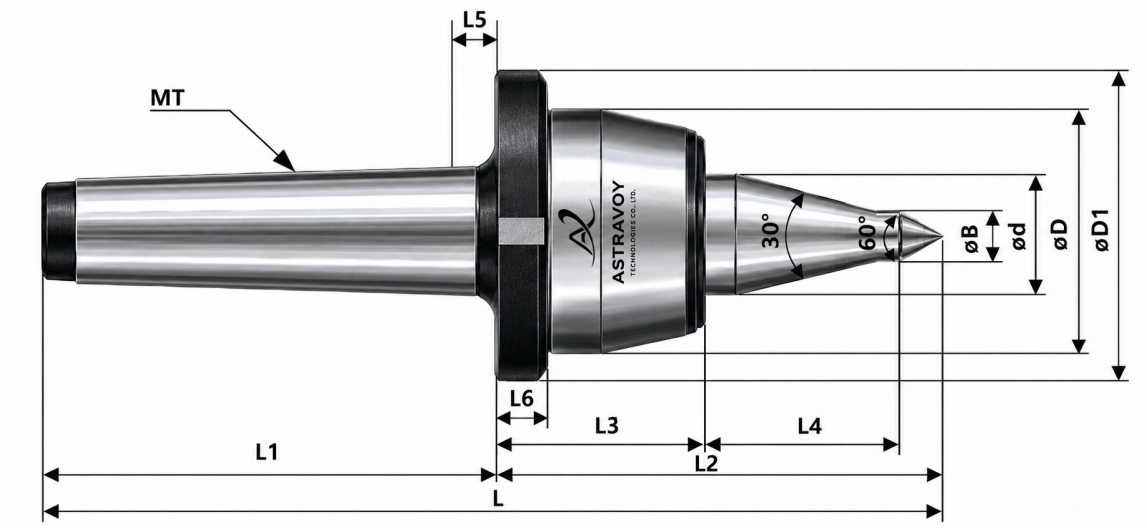

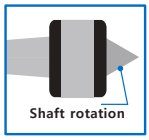







Carbide type

Dimension

Model No	Model	Morse Taper	Dimension											MAX Weight(kg)	MAX R.P.M	MAX Run Out(㎜)
			ΦD	ΦD1	Φd	L	L1	L2	L3	L4	L5	L6	ΦC			
1001072	2SNNAL	MT2	49	65	25	140	68	72	42	30	6	10	10	500	5,000	0.003
1001073	3SNNAL	MT3	49	65	25	157	85	72	42	30	6	10	10	500	5,000	0.003
1001074	4SNNAL	MT4	66	85	31.4	201	108	93	53	40	8	12	14	800	3,800	0.003
1001075	5SNNAL	MT5	83	105	40	251	136	115	65	50	8	15	18	2,000	3,000	0.003
1001076	6SNNAL	MT6	105	125	50	324	189	135	75	60	10	17	30	3,500	2,800	0.003
1001072	2SNNALC	MT2	49	65	25	140	68	72	42	30	6	10	10	500	5,000	0.003
1001073	3SNNALC	MT3	49	65	25	157	85	72	42	30	6	10	10	500	5,000	0.003
1001074	4SNNALC	MT4	66	85	31.4	201	108	93	53	40	8	12	14	800	3,800	0.003
1001075	5SNNALC	MT5	83	105	40	251	136	115	65	50	8	15	18	2,000	3,000	0.003
1001076	6SNNALC	MT6	105	125	50	324	189	135	75	60	10	17	30	3,500	2,800	0.003

3
HRC 58~62
HRA 90~91

- ▶Nut type makes it easy to attach and detach from the axis
- ▶3-level angular shape of the center axis point to minimize interference during processing
- ▶Center axis point Carbide type
- ▶Heat treatment hardness of center shaft HRC 58~62
- ▶Carbide hardness HRA 90~91
- ▶最大限度减少刀具干涉
- ▶顶尖头的热处理硬度为 HRC 58-62
- ▶硬质合金硬度为 HRA 90-91

Maximum R.P.M based on Workpiece weight.

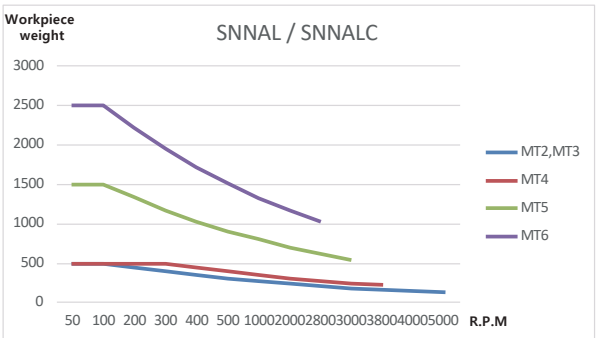

SW Series

Premium Standard Rotating Center



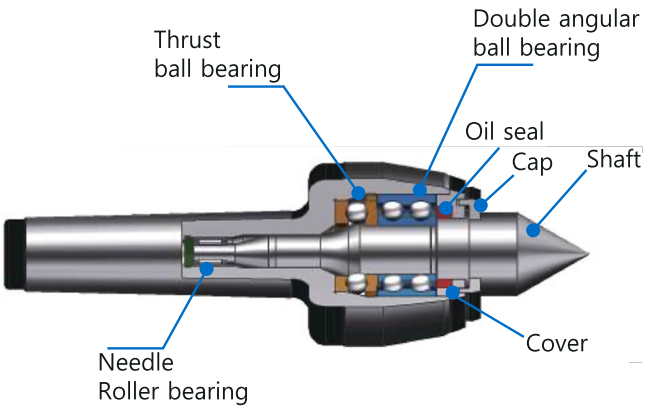

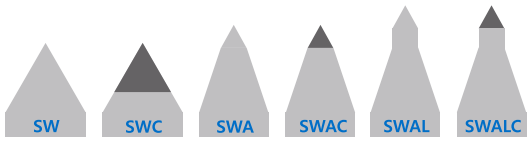

Center Point type

RUN OUT 0.003mm

- Add a contactless seal to prevent infiltration SPECIAL OIL SEAL to coolant and foreign matter
- High degree of accuracy of rotation and high durability by using the triplexed bearing structure as high degree of precision
- Run out - Max 0.003mm

- 采用特殊油封，有效防止切削液和异物质进入
- 采用高精度三重轴承结构，回转精度高，寿命长
- 跳动公差为0.003mm以内

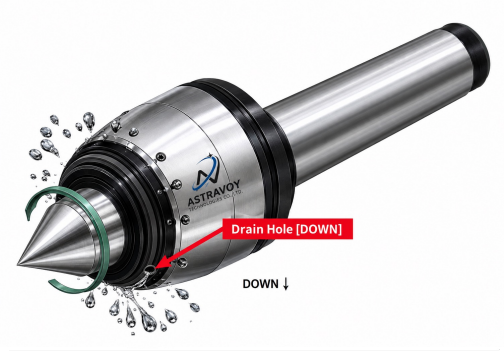

Caution
Use the DOWN ↓ sign facing downwards.



Astra-SW

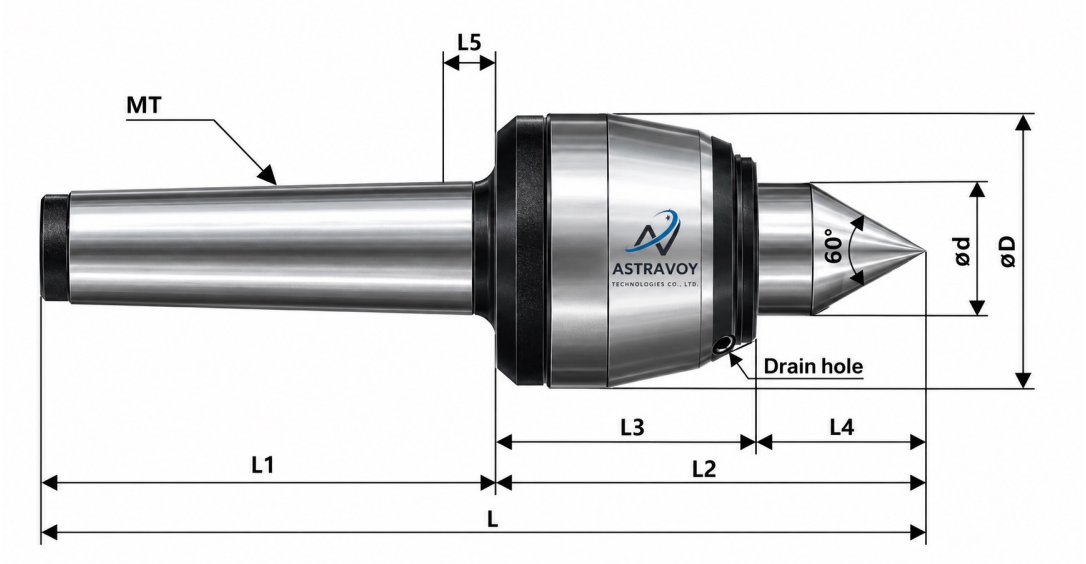

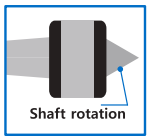



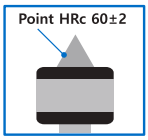





Dimension

Model No	Model	Morse Taper	Dimension								MAX Weight(kg)	MAX R.P.M	MAX Run Out(㎜)
			ΦD	Φd	L	L1	L2	L3	L4	L5			
1011003	3SW	MT3	49	24	165.5	85	80.5	51.5	29	6	500	5,000	0.003
1011004	4SW	MT4	66	30	207.5	108	99.5	61	38.5	8	800	3,800	0.003
1011005	5SW	MT5	83	39	259	136	123	73	50	8	2,000	3,000	0.003
1011006	6SW	MT6	105	49	330	189	141	81	60	10	3,500	2,800	0.003

HRA 58~62

▶Heat treatment hardness of center axis point HRC 58~62

▶顶尖头的热处理硬度为 HRC 58-62

Maximum R.P.M based on Workpiece weight.

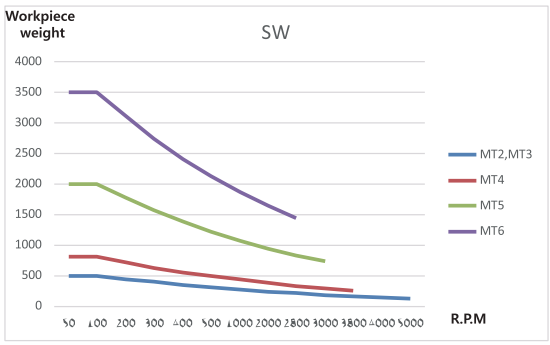

Astra-SWC

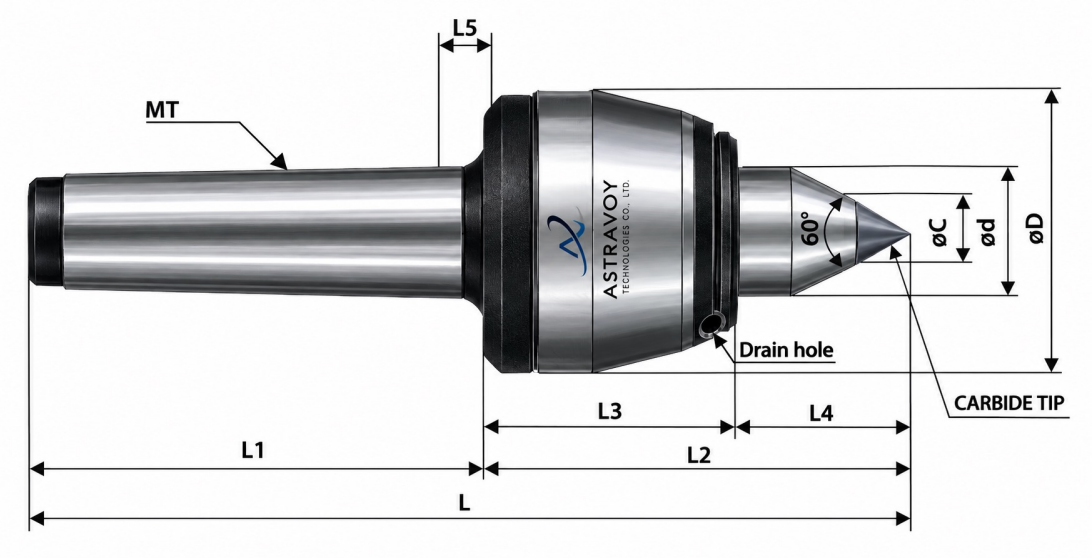

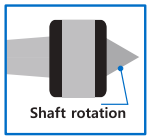



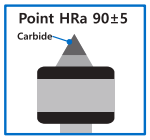



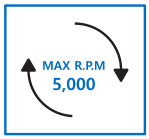

Dimension

Modle No	Modle	Morse Taper	Dimension									MAX Weight(kg)	MAX R.P.M	MAX Run Out(㎜)
			ΦD	Φd	L	L1	L2	L3	L4	L5	ΦC			
1011013	3SWC	MT3	49	24	165.5	85	80.5	51.5	29	6	10	500	5,000	0.003
1011014	4SWC	MT4	66	30	207.5	108	99.5	61	38.5	8	14	800	3,800	0.003
1011015	5SWC	MT5	83	39	259	136	123	73	50	8	18	2,000	3,000	0.003
1011016	6SWC	MT6	105	49	330	189	141	81	60	10	30	3,500	2,800	0.003

HRA 90~91

- ▶Center axis point Carbide type
- ▶Carbide hardness HRA 90~91
- ▶顶尖头部镶入硬质合金，耐磨性显著提高
- ▶硬质合金硬度为 HRA 90-91

Maximum R.P.M based on Workpiece weight.

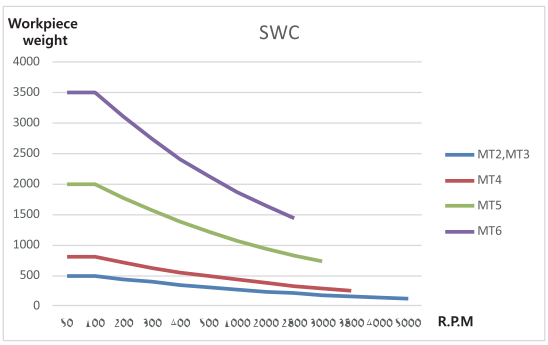

Astra-SWA

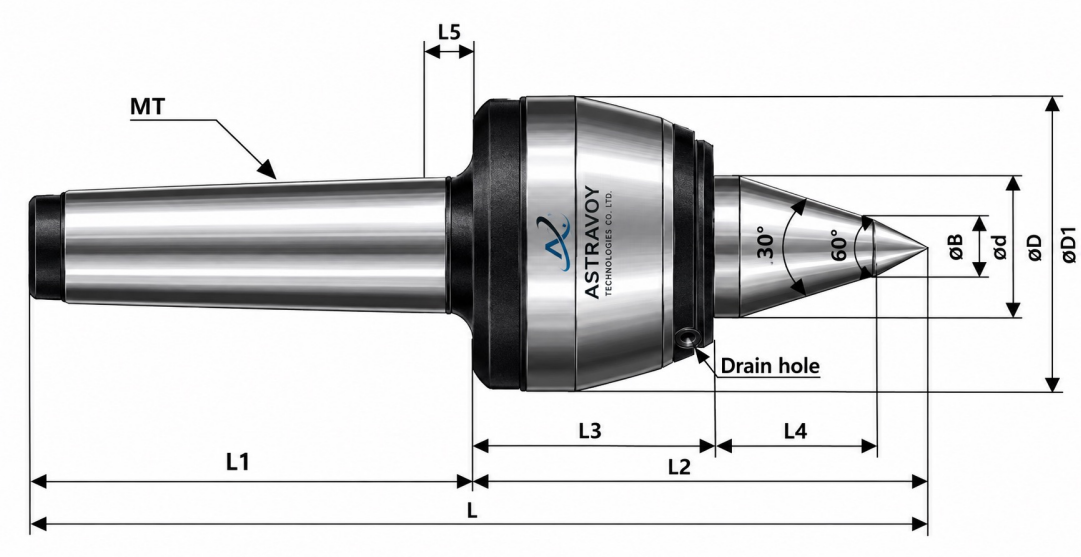

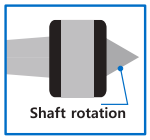



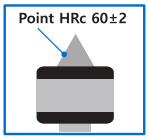





Dimension

Model No	Model	Morse Taper	Dimension									MAX Weight(kg)	MAX R.P.M	MAX Run Out(㎜)
			ΦD	Φd	L	L1	L2	L3	L4	L5	ΦB			
1011023	3SWA	MT3	49	24	176.5	85	91.5	51.5	40	6	10	300	5.000	0.003
1011024	4SWA	MT4	66	30	215.5	108	107.5	61	46.5	8	14	500	3.800	0.003
1011025	5SWA	MT5	83	39	267.3	136	131.3	73	58.3	8	18	1.500	3.000	0.003
1011026	6SWA	MT6	105	49	348	189	159	81	78	10	18	2.500	2.800	0.003

2
HRC 58~62

▶Two-level angular shape of the center axis point to minimize interference during processing
▶Heat treatment hardness of center shaft HRA 58~62
▶顶尖头部采用两段锥度设计，有效减少干涉
▶顶尖头的热处理硬度为 HRC 58-62

Maximum R.P.M based on Workpiece weight.

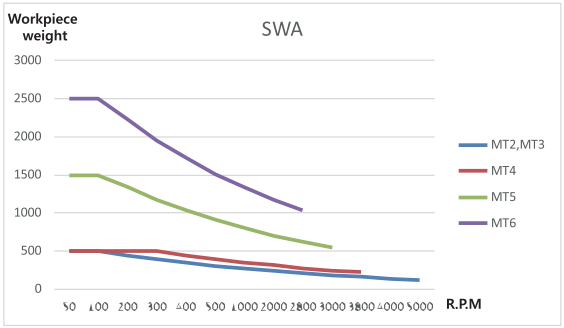

Astra-SWAC

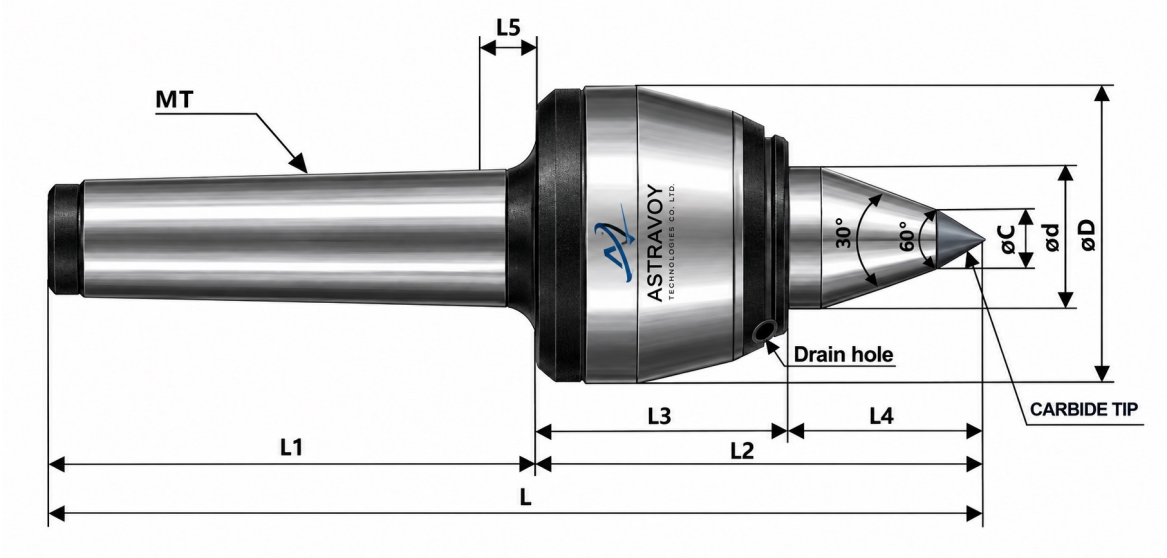

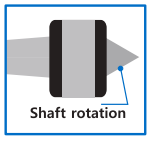









Dimension

Model No	Model	Morse Taper	Dimension								MAX Weight(kg)	MAX R.P.M	MAX Run Out(㎜)
			ΦD	Φd	L	L1	L2	L3	L4	L5	ΦC			
1011033	3SWAC	MT3	49	24	176.5	85	91.5	51.5	40	6	10	300	5.000	0.003
1011034	4SWAC	MT4	66	30	215.5	108	107.5	61	46.5	8	14	500	3.800	0.003
1011035	5SWAC	MT5	83	39	267.3	136	131.3	73	58.3	8	18	1.500	3.000	0.003
1011036	6SWAC	MT6	105	49	348	189	159	81	78	10	18	2.500	2.800	0.003

2

HRA 90~91

- ▶Two-level angular shape of the center axis point to minimize interference during processing
- ▶Center axis point Carbide type
- ▶Carbide hardness HRA 90~91
- ▶顶尖头部采用两段锥度设计，有效减少干涉
- ▶顶尖头部镶入硬质合金，耐磨性显著提高
- ▶硬质合金硬度为 HRA 90-91

Maximum R.P.M based on Workpiece weight.

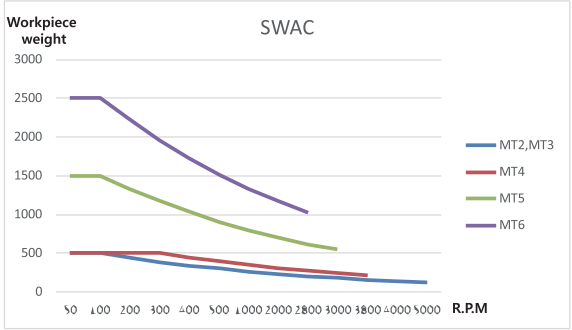

Astra-SWAL / Astra-SWALC

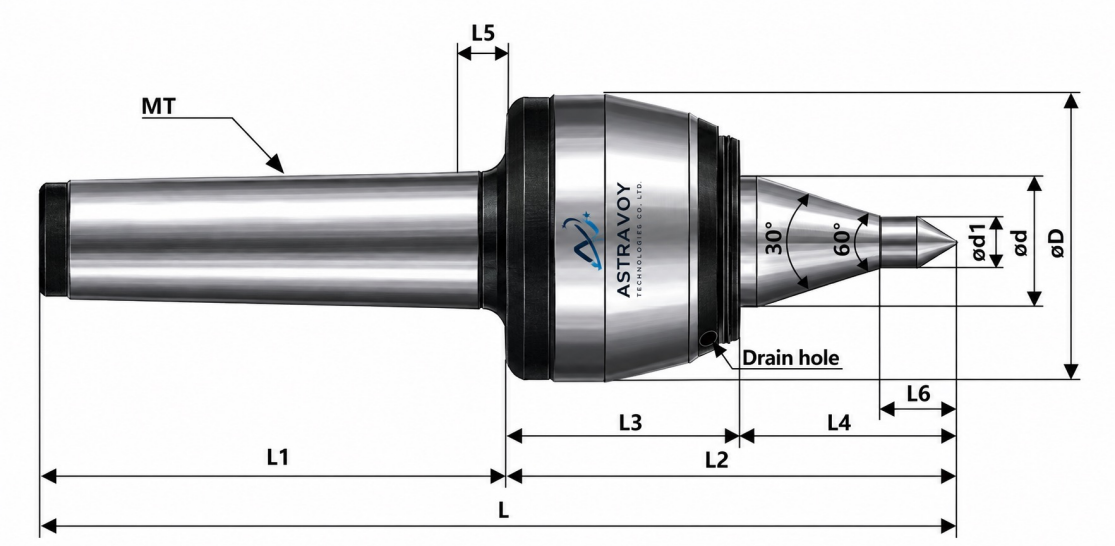

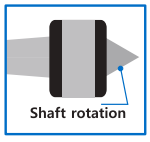







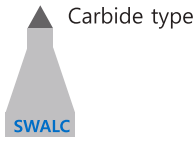

Dimension

Model No	Model	Morse Taper	Dimension										MAX Weight(kg)	MAX R.P.M	MAX Run Out(㎜)
			ΦD	Φd	L	L1	L2	L3	L4	L5	L6	Φd1			
1011045	3SWAL	MT3	49	24	184.6	85	99.6	51.5	48.1	6	19	10	300	5.000	0.003
1011044	4SWAL	MT4	66	30	225.5	108	117.5	61	56.5	8	18	12	500	3.800	0.003
1011045	5SWAL	MT5	83	39	279.2	136	143.2	73	70.2	8	19.5	14	1.500	3.000	0.003
1011046	6SWAL	MT6	105	49	370	189	181	81	100	10	30	14	2.500	2.800	0.003
1011053	3SWALC	MT3	49	24	184.6	85	99.6	51.5	48.1	6	19	10	300	5.000	0.003
1011054	4SWALC	MT4	66	30	225.5	108	117.5	61	56.5	8	18	12	500	3.800	0.003
1011055	5SWALC	MT5	83	39	279.2	136	143.2	73	70.2	8	19.5	14	1.500	3.000	0.003
1011055	6SWALC	MT6	105	49	370	189	181	81	100	10	30	14	2.500	2.800	0.003

3
HRC 58~62
HRa 90~91

- ▶3-level angular shape of the center axis point to minimize interference during processing
- ▶Heat treatment hardness of center shaft HRC 58~62
- ▶Carbide hardness HRa 90~91
- ▶最大限度减少刀具干涉
- ▶顶尖头的热处理硬度为 HRC 58-62
- ▶硬质合金硬度为 HRA 90-91

Maximum R.P.M based on Workpiece weight.

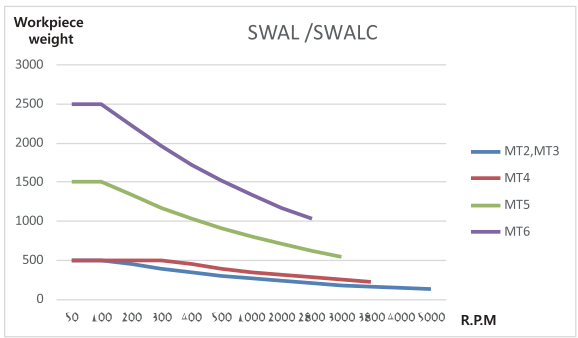

SNP Series

Center point change rotation center

SNP BODY

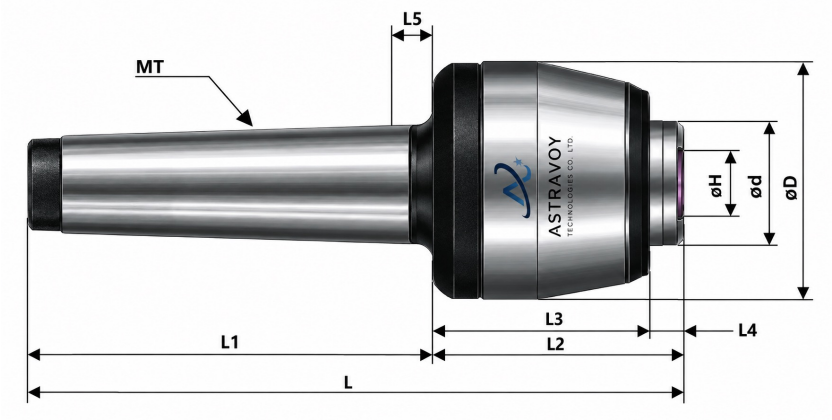



SNP-POINT REMOVER



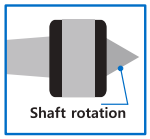



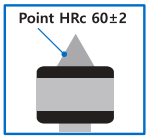





Model No	TYPE
1002013-7	2.3SNP JIG
1002014-7	4SNP JIG
1002015-7	5SNP JIG

Dimension

Model No	Model	Morse Taper	Dimension									MAX Weight(kg)	MAX R.P.M	MAX Run Out(mm)
			ΦD	Φd	L	L1	L2	L3	L4	L5	ΦH			
1002012	2SNP BODY	MT2	49	25	115	68	47	42	5	6	12	100	5,000	0.003
1002013	3SNP BODY	MT3	49	25	132	85	47	42	5	6	12	180	5,000	0.003
1002014	4SNP BODY	MT4	66	31.4	166	108	58	53	5	8	15	300	3,800	0.003
1002015	5SNP BODY	MT5	83	40	207.5	136	71.5	65	6.2	8	22	700	3,000	0.003

HRA 58~62
RUN OUT 0.005mm

- ▶Use by changing the center axis point
- ▶Heat treatment hardness of center shaft HRA 58~62
- ▶RUN OUT within 0.005mm when changing center axis point
- ▶种类繁多的产品加工 以方便切换顶尖使用
- ▶中心轴点热处理硬度为 HRC 58-62
- ▶点紧固件跳动精度0.005以内

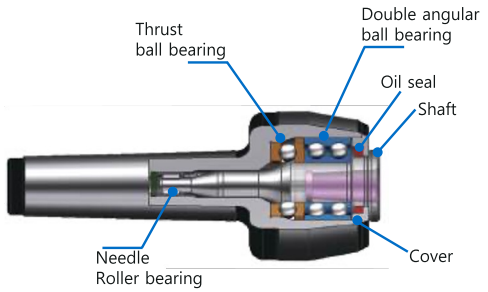

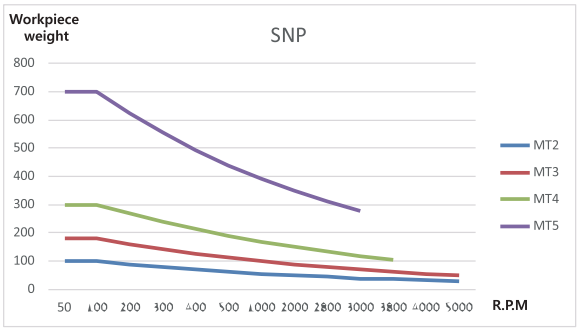

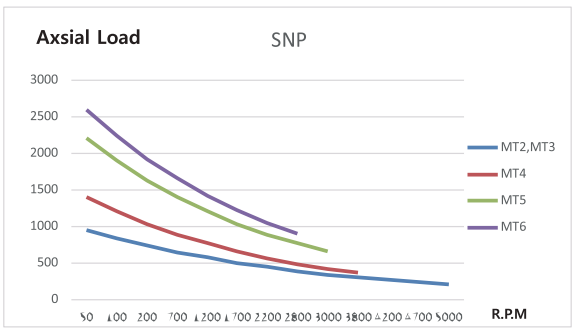

SNP-POINT

Dimension

SNP-POINT 60

Model No	Model	Morse Taper	Dimension				
			ΦD	ΦG	L	L1	L2
1002012-1	2SNP POINT	MT2	20	12	48	24	24
1002013-1	3SNP POINT	MT3	20	12	48	24	24
1002014-1	4SNP POINT	MT4	28	15	61.5	30	31.5
1002015-1	5SNP POINT	MT5	38	22	78	35	43

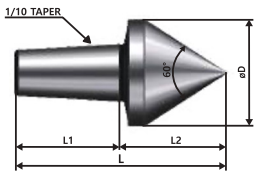

SNP-POINT 75

Model No	Model	Morse Taper	Dimension				
			ΦD	ΦG	L	L1	L2
1002012-2	2SNP POINT	MT2	20	12	43.8	24	19.8
1002013-2	3SNP POINT	MT3	20	12	43.8	24	19.8
1002014-2	4SNP POINT	MT4	28	15	55.6	30	25.9
1002015-2	5SNP POINT	MT5	38	22	70	35	35

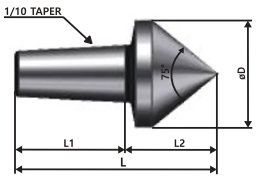

SNP-POINT 90

Model No	Model	Morse Taper	Dimension				
			ΦD	ΦG	L	L1	L2
1002012-3	2SNP POINT	MT2	20	12	40.9	24	16.9
1002013-3	3SNP POINT	MT3	20	12	40.9	24	16.9
1002014-3	4SNP POINT	MT4	28	15	51.5	30	21.5
1002015-3	5SNP POINT	MT5	38	22	64.3	35	29.3

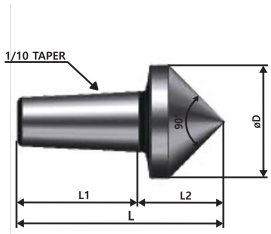

SNP-POINT A30

Model No	Model	Morse Taper	Dimension					
			ΦD	ΦG	L	L1	L2	Φd
1002012-4	2SNP POINT	MT2	18	12	54	24	30	10
1002013-4	3SNP POINT	MT3	18	12	54	24	30	10
1002014-4	4SNP POINT	MT4	26	15	73	30	43	12
1002015-4	5SNP POINT	MT5	32	22	90	35	55	14

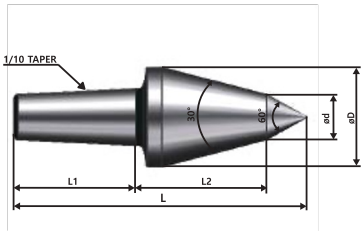

SNP-POINT B60

Model No	Model	Morse Taper	Dimension					
			ΦD	ΦG	L	L1	L2	Φd
1002012-5	2SNP POINT	MT2	45	12	51	24	27	25
1002013-5	3SNP POINT	MT3	45	12	51	24	27	25
1002014-5	4SNP POINT	MT4	55	15	61.5	30	31.5	30
1002015-5	5SNP POINT	MT5	70	22	73	35	38	40

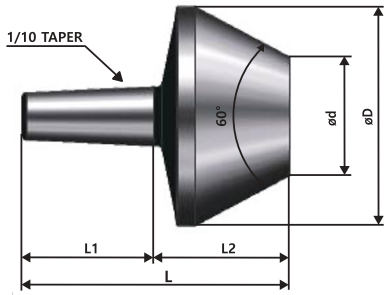

SNP-POINT H60

Model No	Model	Morse Taper	Dimension						
			ΦD	ΦG	L	L1	L2	ΦH	Φh
1002012-6	2SNP POINT	MT2	22	12	40	24	16	18	6
1002013-6	3SNP POINT	MT3	22	12	40	24	16	18	6
1002014-6	4SNP POINT	MT4	40	15	57	30	27	36	15
1002015-6	5SNP POINT	MT5	50	22	65	35	30	47	25

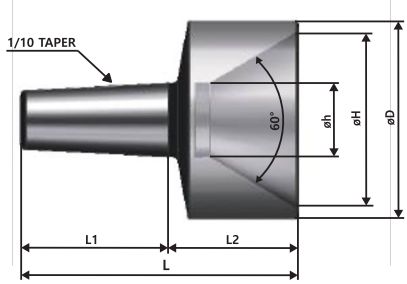

CNP Series

Center point change rotation center for small workpieces

CNP BODY

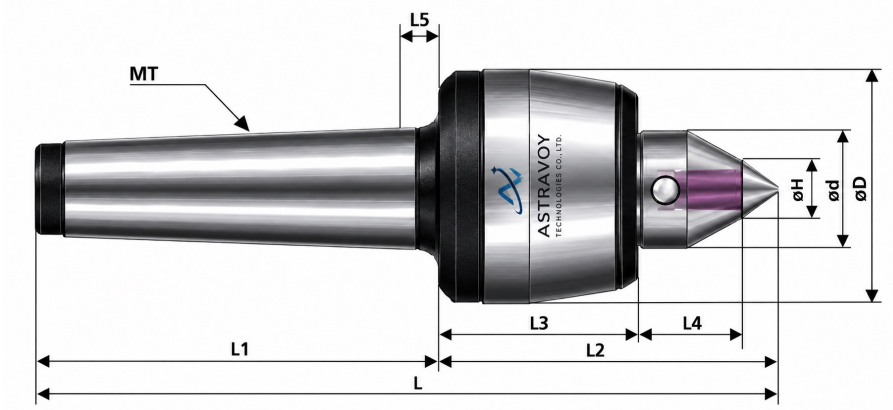



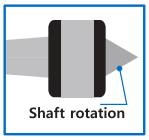



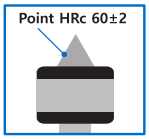





Dimension

Model No	Modle	Morse Taper	Dimension								MAX R.P.M	MAX Run Out(㎜)
			ΦD	Φd	L	L1	L2	L3	L4	L5	ΦH	
1022013	3CNP BODY	MT3	49	31.4	158.5	85	73.5	42	31.5	6	12	5,000	0.003
1022014	4SNP BODY	MT4	63	31.4	191	108	83	53	30	8	12	4,000	0.003
1022015	5CNP BODY	MT5	83	40	235	136	99	65	34	8	12	3,000	0.003

2
HRC 58~62
body RUN OUT 0.003mm
RUN OUT 0.005mm

- ▶Use by changing the center axis point
- ▶Two-level angular shape of the center axis point to minimize interference during processing
- ▶Heat treatment hardness of center shaft HRC 58~62
- ▶Center body RUN OUT within 0.003mm
- ▶RUN OUT within 0.005mm when changing center axis point
- ▶种类繁多的产品加工 以方便切换顶尖使用
- ▶中心轴点热处理硬度为 HRC 58-62
- ▶点紧固件跳动精度0.005以内

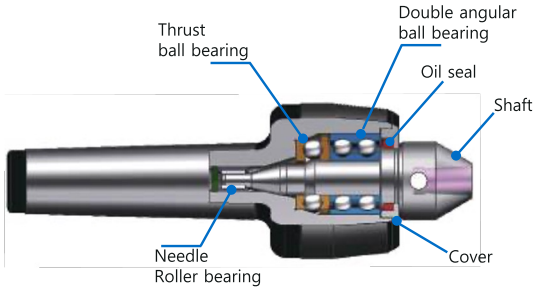

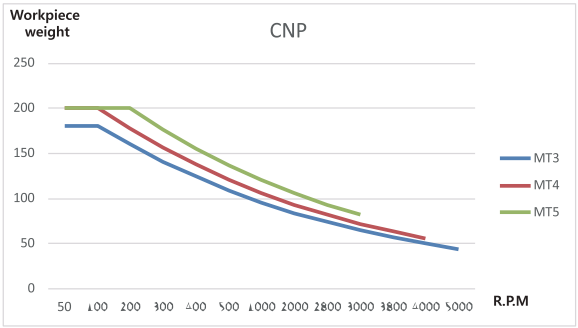

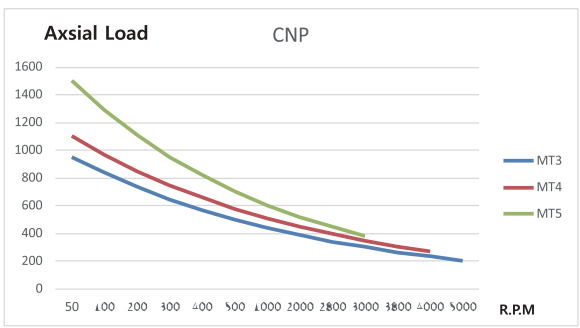

CNP-POINT

Dimension

Model No	Model	Morse Taper	Dimension			
			Φd	ΦD	L	H
CNP P06	CNP POINT	1:10	6	12.2	40	
CNP P08	CNP POINT	1:10	8	12.2	36	
CNP P10	CNP POINT	1:10	10	12.2	36	
CNP P12	CNP POINT	1:10	12	12.2	36	
CNP H60	CNP POINT	1:10	10	12.2	36	7
CNP B60	CNP POINT	1:10	11	31.4	44.1	

CNP P06

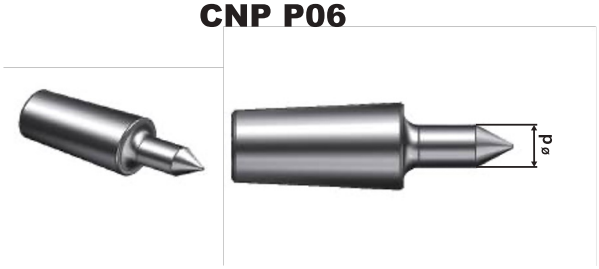

CNP P08



CNP P10

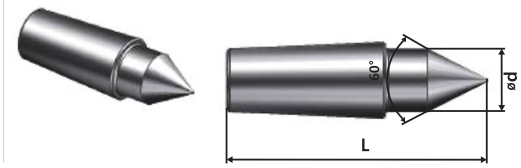

CNP P12

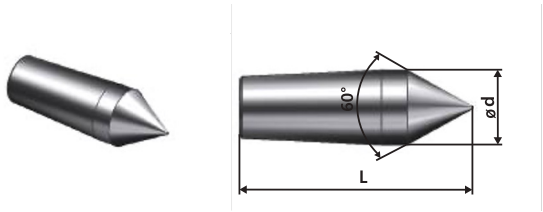

CNP H60

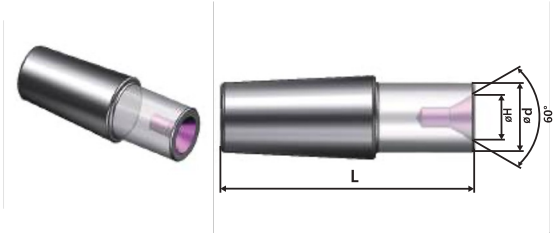

CNP B60

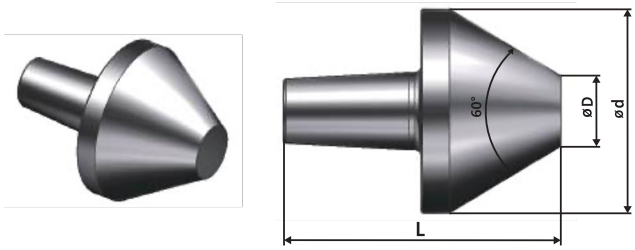

CNP Disassembly tool

