SH Series

General for high-speed rotation



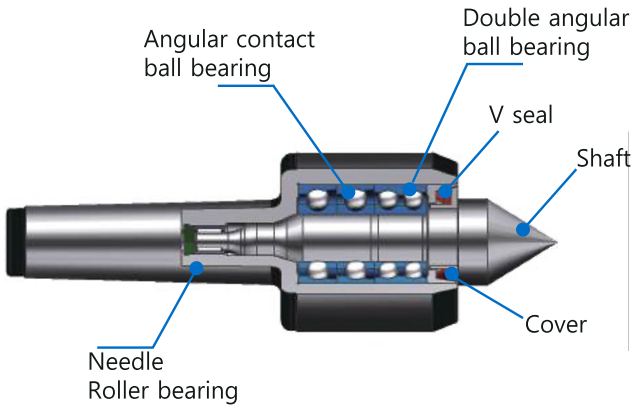

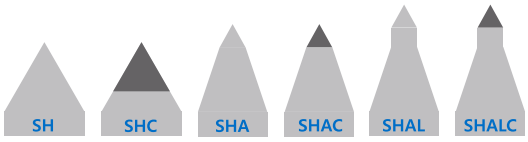

Center Point type

RUN OUT 0.002mm

- ▶ Use high speed bearing and special oil seal
- ▶ Easy to work at high speed
- ▶ Run out - Max 0.002mm

- ▶ 使用高速轴承和特殊密封胶条
- ▶ 适用于高速加工
- ▶ RUN OUT 0.002mm 以内

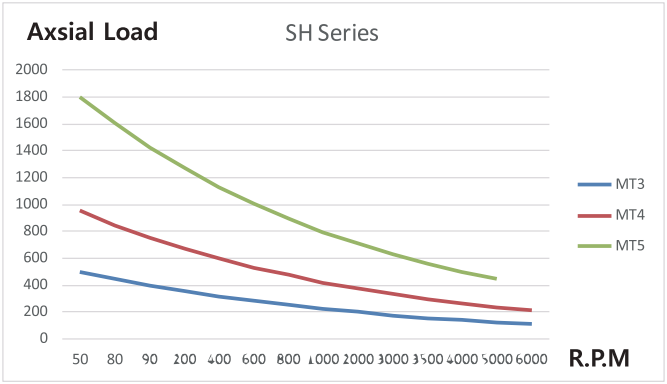

Astra-SH

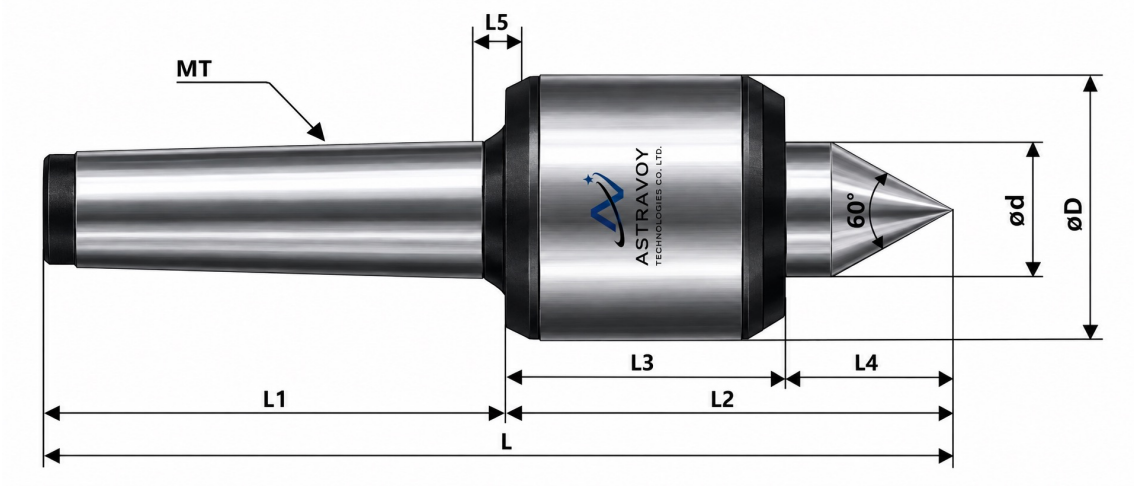

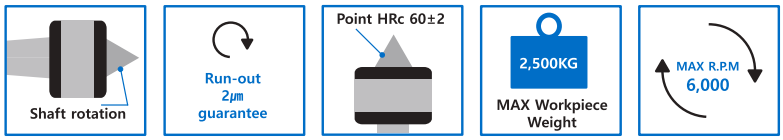

Dimension

Model No	Model	Morse Taper	Dimension								MAX Weight(kg)	MAX R.P.M	MAX Run Out(㎜)
			ΦD	Φd	L	L1	L2	L3	L4	L5			
1023003	3SH	MT3	49	25	167.4	85	82.4	54.4	28	4.5	750	6,000	0.002
1023004	4SH	MT4	66	32	216.6	108	108.6	69.6	39	5.3	1,400	6,000	0.002
1023005	5SH	MT5	82	40	258.8	136	122.8	79.8	43	6.3	2,500	5,000	0.002

HRC 52~62

▶Heat treatment hardness of center axis point HRC 58~62

▶顶尖头的热处理硬度为 HRC 58-62

Maximum R.P.M based on Workpiece weight.

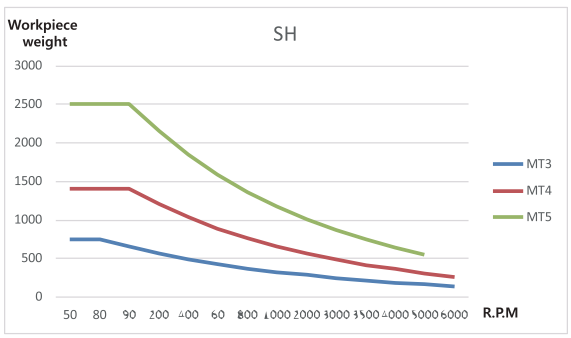

Astra-SHC

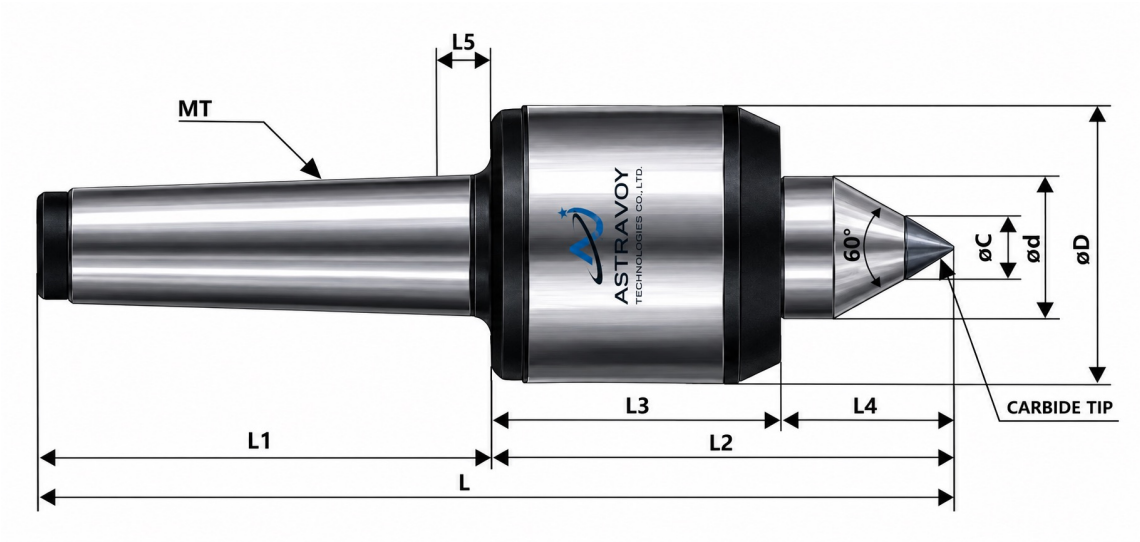

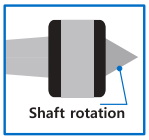



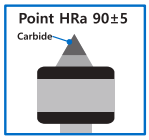





Dimension

Model No	Model	Morse Taper	Dimension									MAX Weight(kg)	MAX R.P.M	MAX Run Out(㎜)
			ΦD	Φd	L	L1	L2	L3	L4	L5	ΦC			
1023013	3SHC	MT3	49	25	167.4	85	82.4	54.4	28	4.5	10	750	6,000	0.002
1023014	4SHC	MT4	66	32	216.6	108	108.6	69.6	39	5.3	14	1,400	6,000	0.002
1023015	5SHC	MT5	82	40	258.8	136	122.8	79.8	43	6.3	18	2,500	5,000	0.002

HRA 90~91
▶Center axis point Carbide type
▶Carbide hardness HRA 90~91
▶顶尖头部镶入硬质合金，耐磨性显著提高
▶硬质合金硬度为 HRA 90-91

Maximum R.P.M based on Workpiece weight.

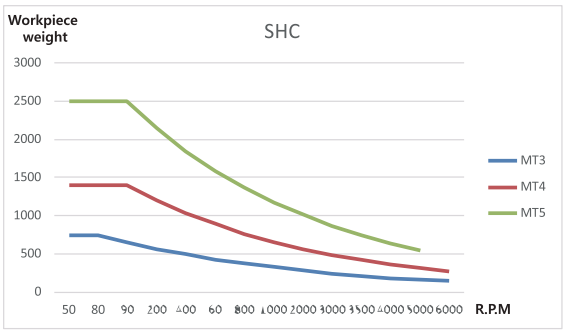

Astra-SHA

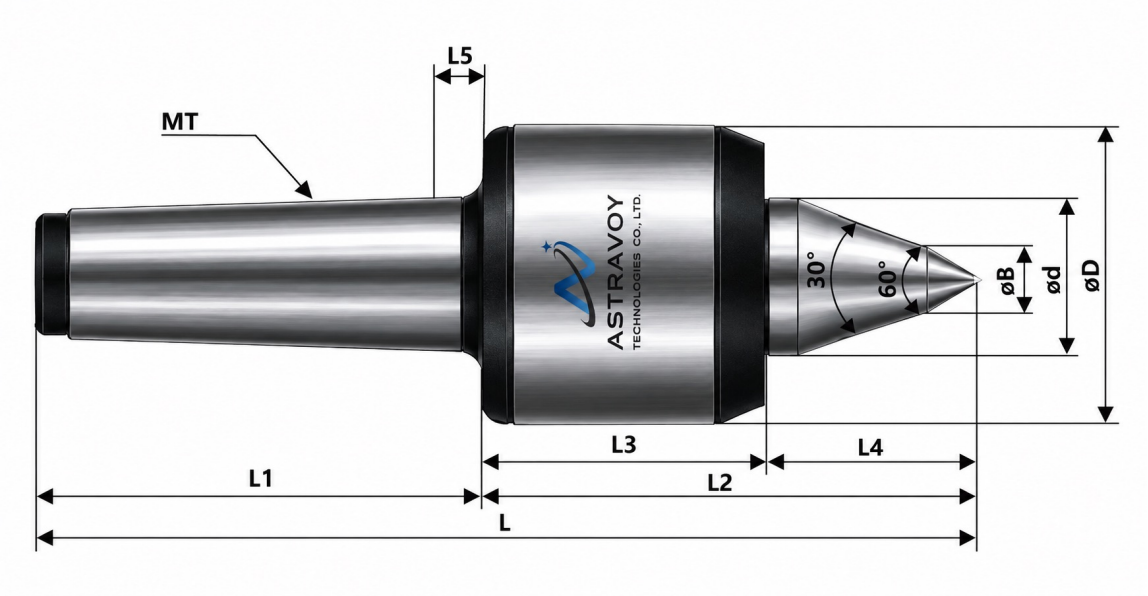

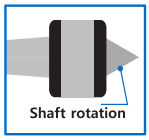



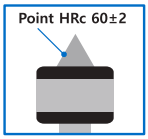





Dimension

Model No	Model	Morse Taper	Dimension									MAX Weight(kg)	MAX R.P.M	MAX Run Out(㎜)
			ΦD	Φd	L	L1	L2	L3	L4	L5	ΦB			
1023023	3SHA	MT3	49	25	177.4	85	92.4	54.4	38	4.5	12	600	6,000	0.002
1023024	4SHA	MT4	66	32	230.6	108	122.6	69.6	53	5.3	14	1,100	6,000	0.002
1023025	5SHA	MT5	82	40	279	136	143	79.8	63.2	6.3	16	2,000	5,000	0.002

2
HRC 58~62

- ▶Two-level angular shape of the center axis point to minimize interference during processing
- ▶Heat treatment hardness of center shaft HRC 58~62
- ▶顶尖头部采用两段锥度设计，有效减少干涉
- ▶顶尖头的热处理硬度为 HRC 58-62

Maximum R.P.M based on Workpiece weight.

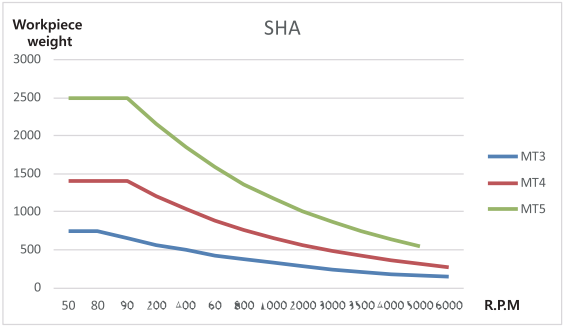

Astra-SHAC

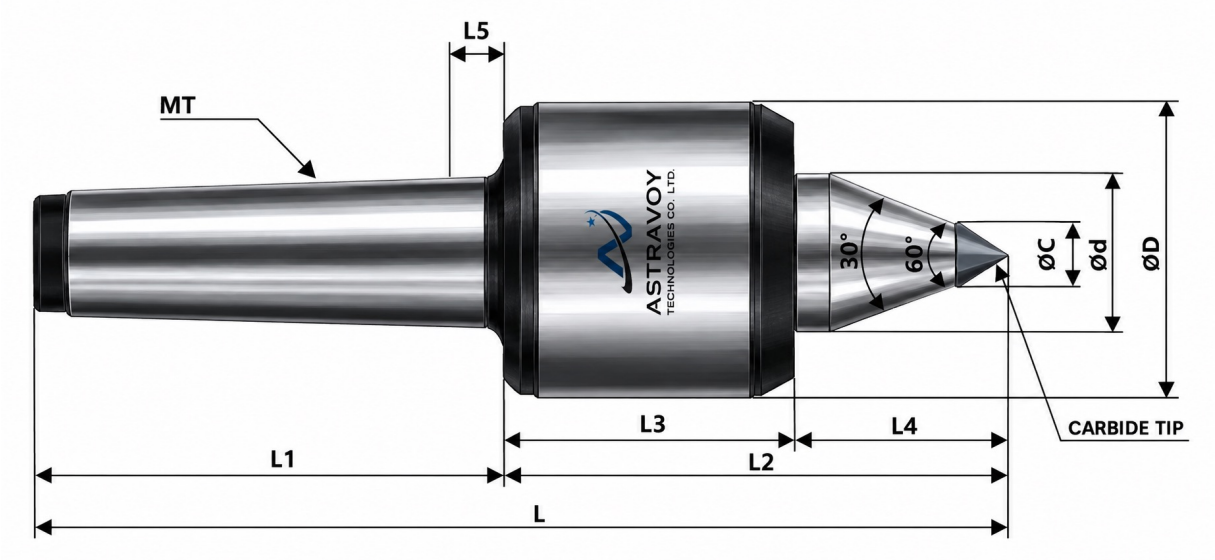



Dimension

Model No	Model	Morse Taper	Dimension									MAX Weight(kg)	MAX R.P.M	MAX Run Out(㎜)
			ΦD	Φd	L	L1	L2	L3	L4	L5	ΦC			
1023033	3SHAC	MT3	49	25	177.4	85	92.4	54.4	38	4.5	12	600	6,000	0.002
1023034	4SHAC	MT4	66	32	230.6	108	122.6	69.6	53	5.3	14	1,100	6,000	0.002
1023035	5SHAC	MT5	82	40	279	136	143	79.8	63.2	6.3	16	2,000	5,000	0.002

2

HRA 90~91

- Two-level angular shape of the center axis point to minimize interference during processing
- Center axis point Carbide type
- Carbide hardness HRA 90~91
- 顶尖头部采用两段锥度设计，有效减少干涉
- 顶尖头部镶入硬质合金，耐磨性显著提高
- 硬质合金硬度为 HRA 90-91

Maximum R.P.M based on Workpiece weight.

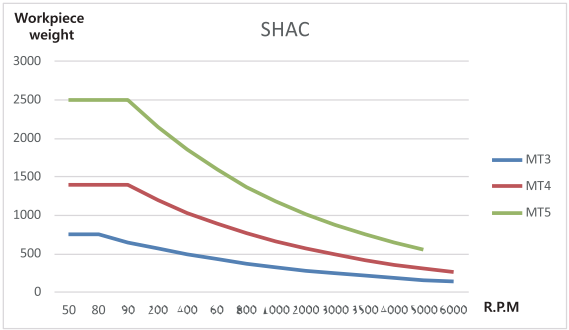

Astra-SHAL / Astra-SHALC

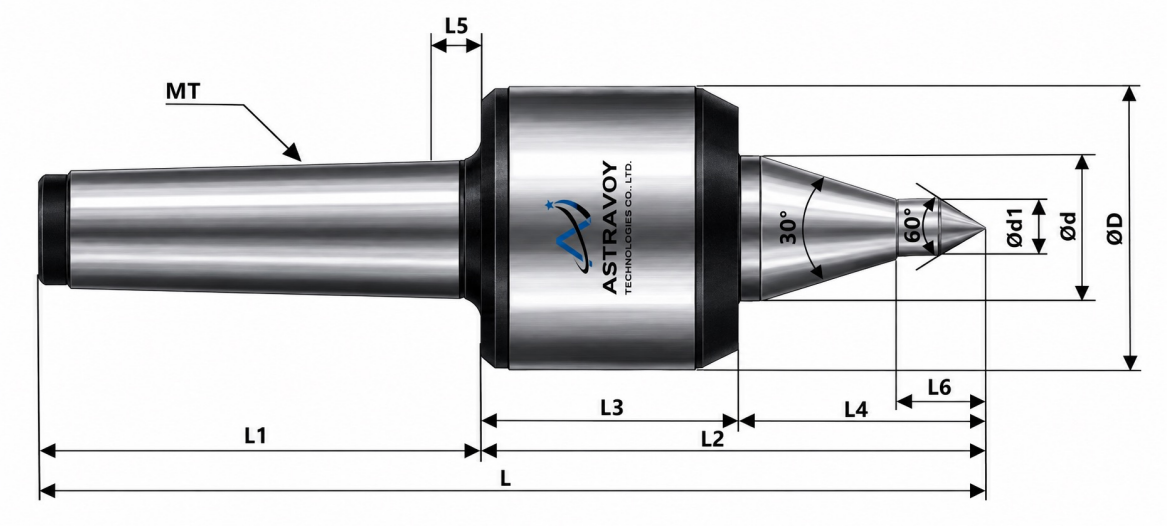



Dimension

Model No	Model	Morse Taper	Dimension										MAX Weight(kg)	MAX R.P.M	MAX Run Out(㎜)
			ΦD	Φd	L	L1	L2	L3	L4	L5	L6	Φd1			
1023043	3SHAL	MT3	49	25	184.4	85	99.4	54.4	45	4.5	15	10	600	6,000	0.002
1023044	4SHAL	MT4	66	32	242.6	108	134.6	69.6	65	5.3	23	12	1,100	6,000	0.002
1023045	5SHAL	MT5	82	40	296.5	136	160.5	79.8	80.7	6.3	24	12	2,000	5,000	0.002
1023053	3SHALC	MT3	49	25	184.4	85	99.4	54.4	45	4.5	15	10	600	6,000	0.002
1023054	4SHALC	MT4	66	32	242.6	108	134.6	69.6	65	5.3	23	12	1,100	6,000	0.002
1023055	5SHALC	MT5	82	40	296.5	136	160.5	79.8	80.7	6.3	24	12	2,000	5,000	0.002

3
HRC 58~62
HRA 90~91

- ▶3-level angular shape of the center axis point to minimize interference during processing
- ▶Heat treatment hardness of center shaft HRC 58~62
- ▶Carbide hardness HRA 90~91
- ▶最大限度减少刀具干涉
- ▶顶尖头的热处理硬度为 HRC 58-62
- ▶硬质合金硬度为 HRA 90-91

Maximum R.P.M based on Workpiece weight.

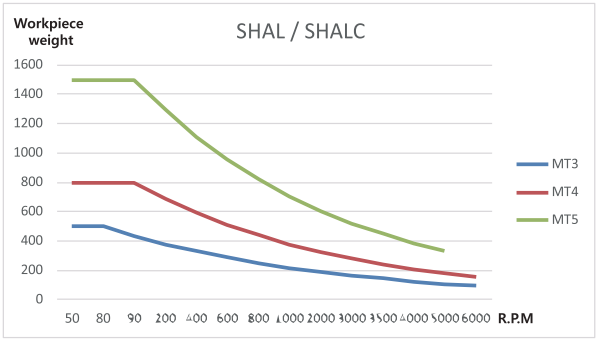

SNH Series
High-speed Premium



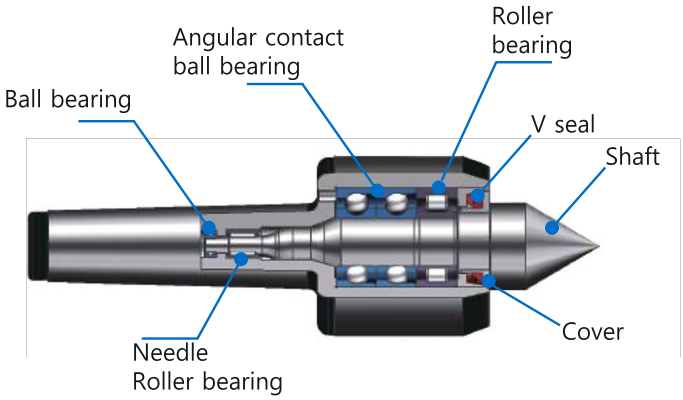

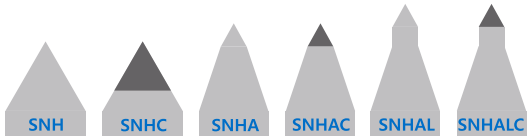

Center Point type

RUN OUT 0.002mm

- Use high speed bearing and special oil seal
- Easy to work at high speed
- Run out - Max 0.002mm

- 高速专用精密轴承和特殊油泵使用
- 适合高速精密加工使用
- 跳动精度0.002以内



Astra-SNH

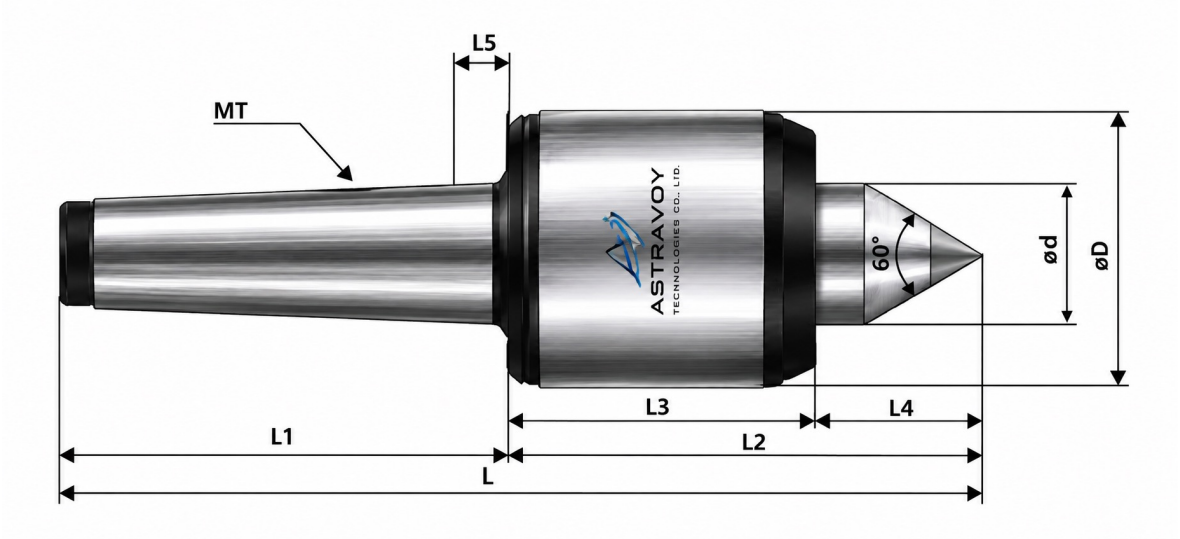

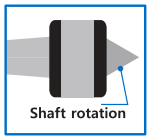



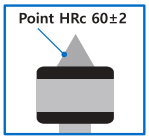



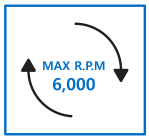

Dimension

Model No	Model	Morse Taper	Dimension								MAX Weight(kg)	MAX R.P.M	MAX Run Out(㎜)
			ΦD	Φd	L	L1	L2	L3	L4	L5			
1003003	3SNH	MT3	49	25	162.5	85	77.5	49.5	28	4.5	750	6,000	0.002
1003004	4SNH	MT4	66	32	213	108	105	64	41	5.3	1,500	6,000	0.002
1003005	5SNH	MT5	82	40	251	136	115	72	43	6.3	2,500	5,000	0.002

HRC 58~62

▶Heat treatment hardness of center axis point HRC 58~62

▶顶尖头的热处理硬度为 HRC 58-62

Maximum R.P.M based on Workpiece weight.



Astra-SNHC

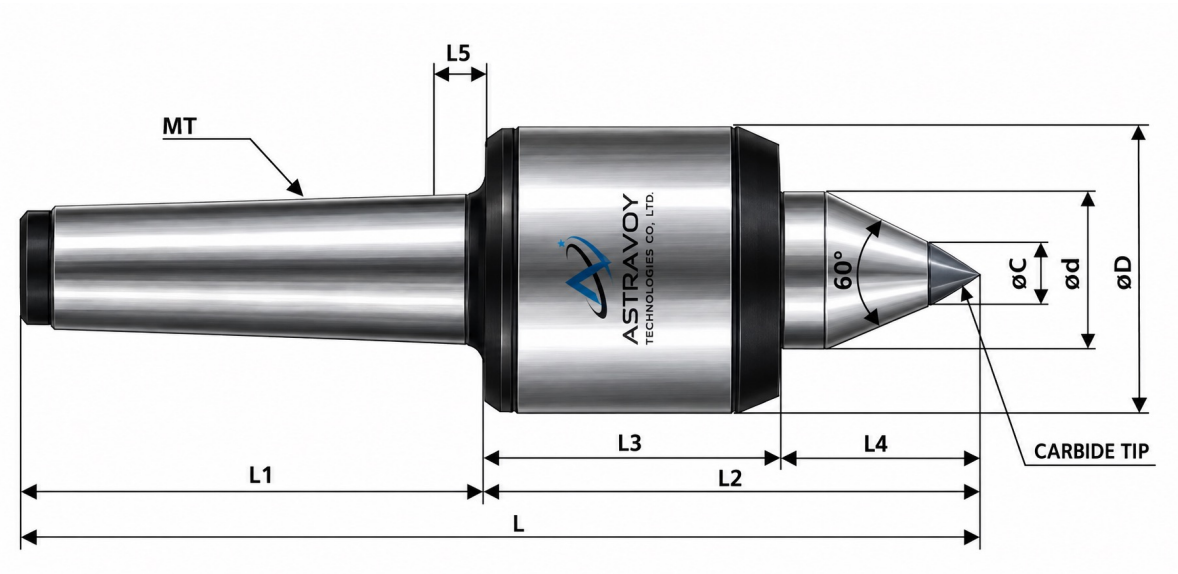

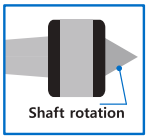



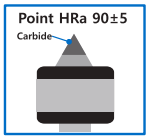



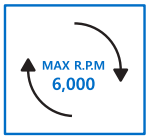

Dimension

Model No	Model	Morse Taper	Dimension									MAX Weight(kg)	MAX R.P.M	MAX Run Out(㎜)
			ΦD	Φd	L	L1	L2	L3	L4	L5	ΦC			
1003013	3SNHC	MT3	49	25	162.5	85	77.5	49.5	28	4.5	10	750	6,000	0.002
1003014	4SNHC	MT4	66	32	213	108	105	64	41	5.3	14	1,500	6,000	0.002
1003015	5SNHC	MT5	82	40	251	136	115	72	43	6.3	18	2,500	5,000	0.002

HRA 90~91
- ▶Center axis point Carbide type
- ▶Carbide hardness HRA 90~91
- ▶顶尖头部镶入硬质合金，耐磨性显著提高
- ▶硬质合金硬度为 HRA 90-91

Maximum R.P.M based on Workpiece weight.

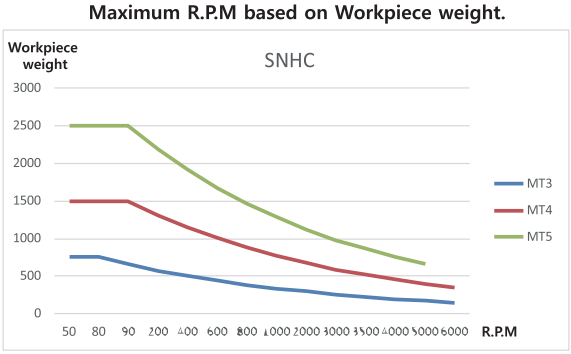

Astra-SNHA

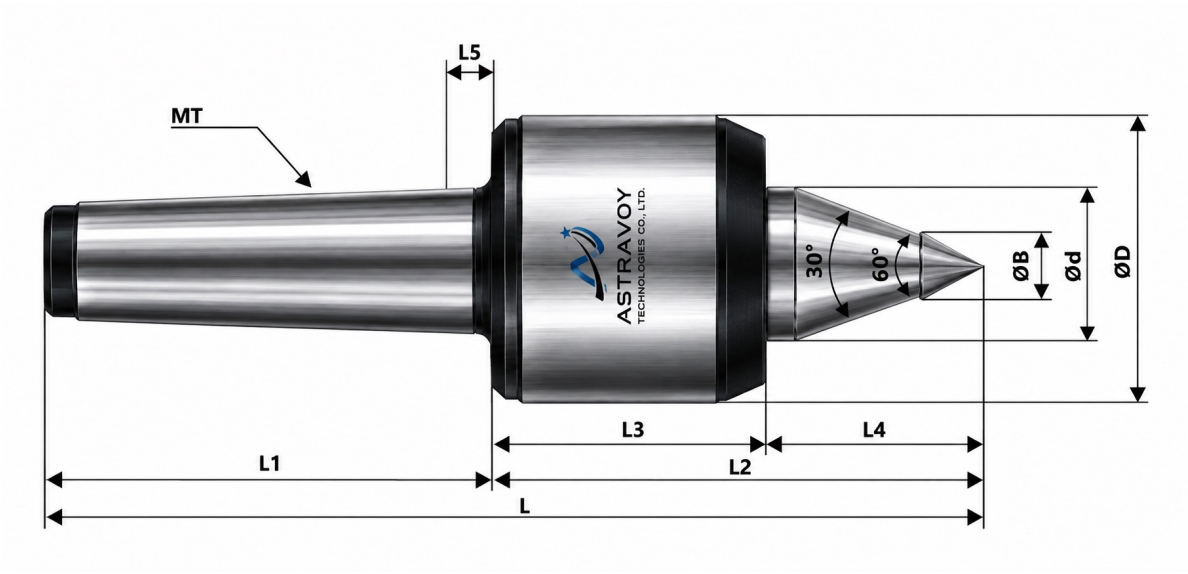

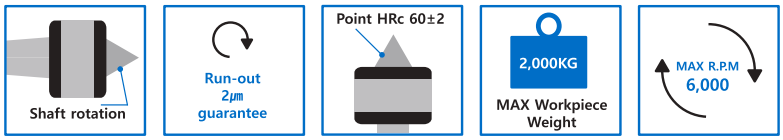

Dimension

Model No	Model	Morse Taper	Dimension									MAX Weight(kg)	MAX R.P.M	MAX Run Out(㎜)
			ΦD	Φd	L	L1	L2	L3	L4	L5	ΦB			
1003023	3SNHA	MT3	49	25	172.5	85	87.5	49.5	38	4.5	12	600	6,000	0.002
1003024	4SNHA	MT4	66	32	225	108	117	64	53	5.3	14	1,100	6,000	0.002
1003025	5SNHA	MT5	82	40	273	136	137	72	65	6.3	16	2,000	5,000	0.002

2
HRC 58~62

- ▶Two-level angular shape of the center axis point to minimize interference during processing
- ▶Heat treatment hardness of center shaft HRC 58~62
- ▶顶尖头部采用两段锥度设计，有效减少干涉
- ▶顶尖头的热处理硬度为 HRC 58-62

Maximum R.P.M based on Workpiece weight.

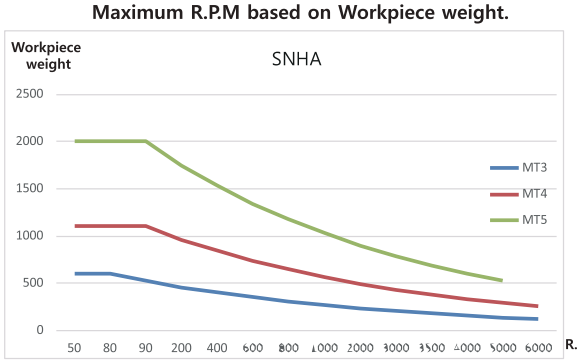

Astra-SNHAC

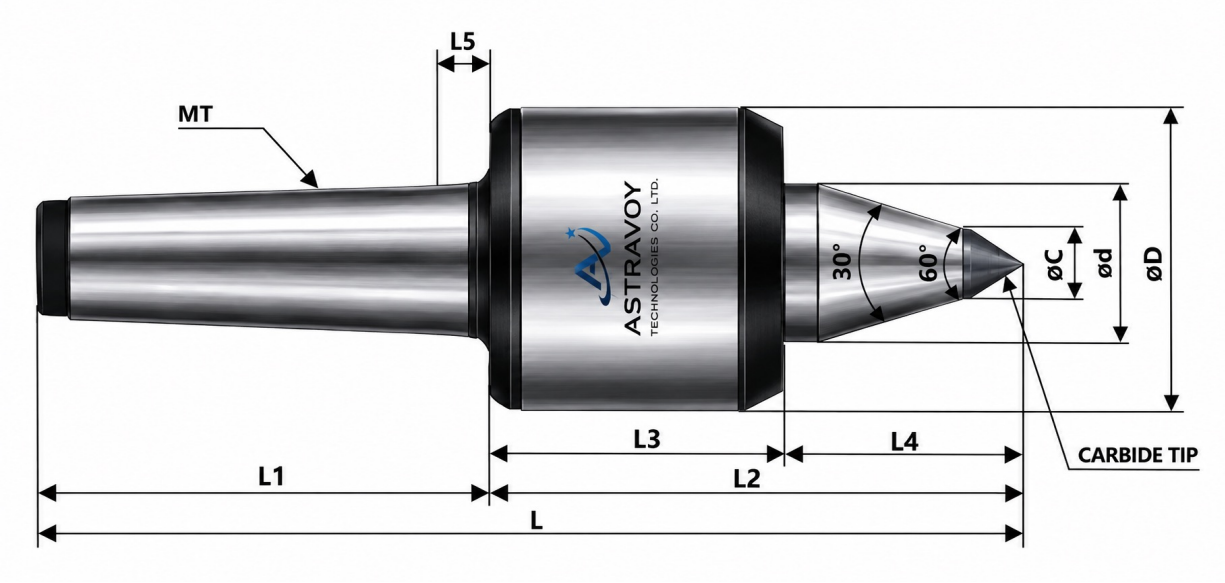

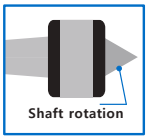



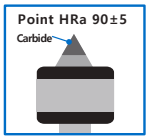





Dimension

Model No	Model	Morse Taper	Dimension									MAX Weight(kg)	MAX R.P.M	MAX Run Out(㎜)
			ΦD	Φd	L	L1	L2	L3	L4	L5	ΦC			
1003033	3SNHAC	MT3	49	25	172.5	85	87.5	49.5	38	4.5	12	600	6,000	0.002
1003034	4SNHAC	MT4	66	32	225	108	117	64	53	5.3	14	1,100	6,000	0.002
1003035	5SNHAC	MT5	82	40	273	136	137	72	65	6.3	16	2,000	5,000	0.002

2

HRA 90~91

- Two-level angular shape of the center axis point to minimize interference during processing
- Center axis point Carbide type
- Carbide hardness HRA 90~91
- 顶尖头部采用两段锥度设计，有效减少干涉
- 顶尖头部镶入硬质合金，耐磨性显著提高
- 硬质合金硬度为 HRA 90-91

Maximum R.P.M based on Workpiece weight.

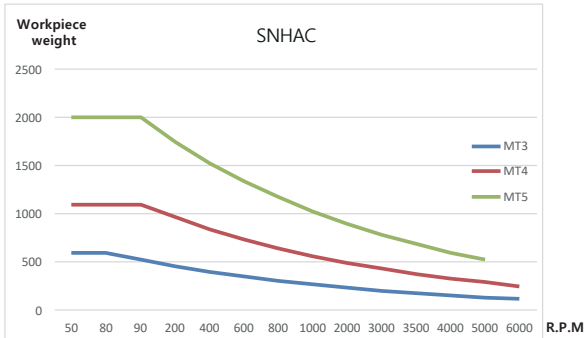

Astra-SNHAL / Astra-SNHALC

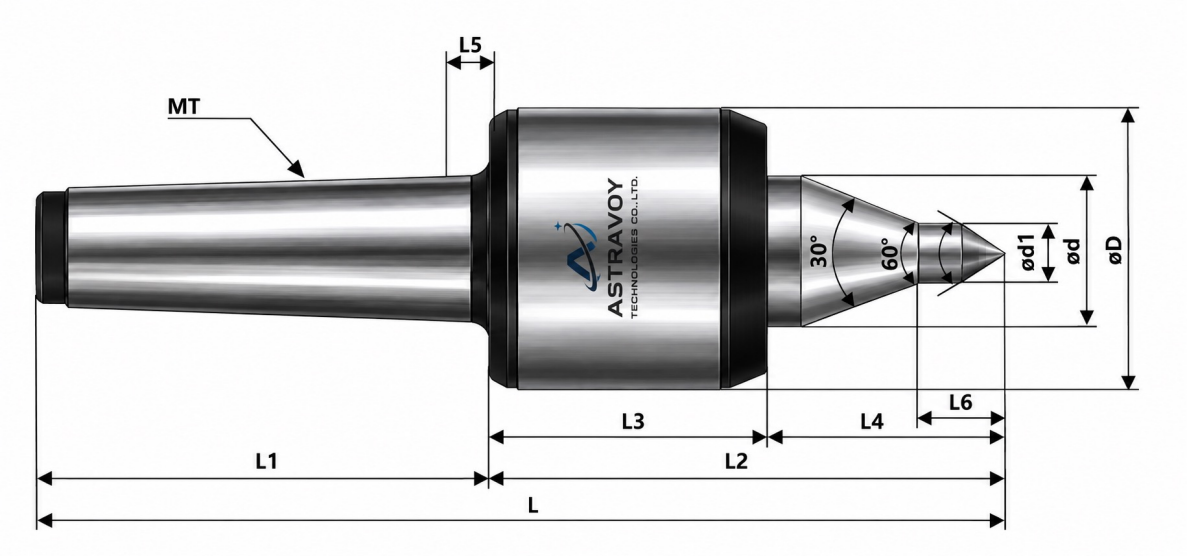



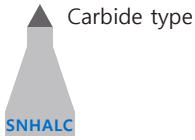

Dimension

Model No	Model	Morse Taper	Dimension										MAX Weight(kg)	MAX R.P.M	MAX Run Out(㎜)
			ΦD	Φd	L	L1	L2	L3	L4	L5	L6	Φd1			
1003043	3SNHAL	MT3	49	25	183.5	85	98.5	49.5	49	4.5	19	10	500	6,000	0.002
1003044	4SNHAL	MT4	66	32	235	108	127	64	63	5.3	23	12	900	6,000	0.002
1003045	5SNHAL	MT5	82	40	288	136	152	72	80	6.3	23	12	1,700	5,000	0.002
1003053	3SNHALC	MT3	49	25	183.5	85	98.5	49.5	49	4.5	19	10	500	6,000	0.002
1003054	4SNHALC	MT4	66	32	235	108	127	64	63	5.3	23	12	900	6,000	0.002
1003055	5SNHALC	MT5	82	40	288	136	152	72	80	6.3	23	12	1,700	5,000	0.002

3
HRC 58~62
HRA 90~91

- ▶3-level angular shape of the center axis point to minimize interference during processing
- ▶Heat treatment hardness of center shaft HRC 58~62
- ▶Carbide hardness HRA 90~91
- ▶最大限度减少刀具干涉
- ▶顶尖头的热处理硬度为 HRC 58-62
- ▶硬质合金硬度为 HRA 90-91

Maximum R.P.M based on Workpiece weight.

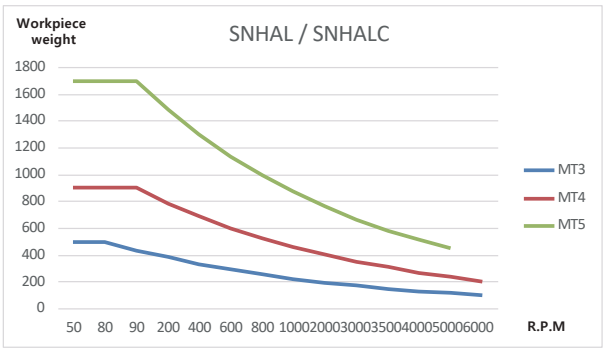

SSH Series

Ultra High-speed



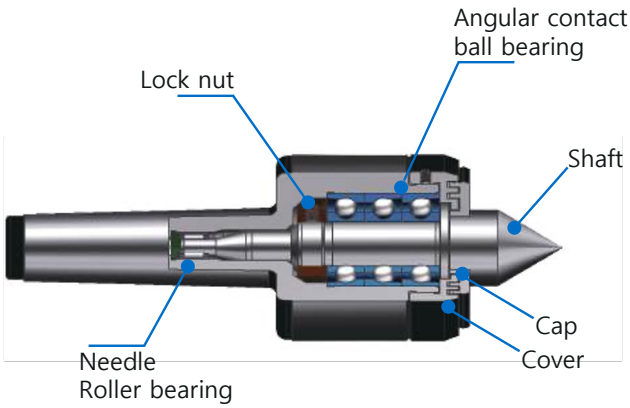

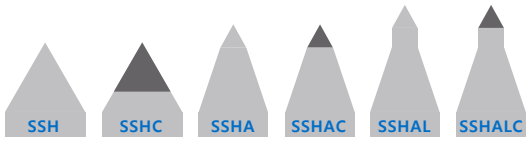

Center Point type

,

RUN OUT 0.002mm

- ▶ High-speed precision bearing structure
- ▶ Using the non-contact oil seal to prevent heat-resistant, coolant and foreign matter ingress
- ▶ It facilitates high-speed precision work.
- ▶ Run out - Max 0.002mm

- ▶ 超高速精密轴承构造
- ▶ 非接触式油泵使用，防止发热，防止切削油及异物质侵入
- ▶ 适合加工使用超高速精密
- ▶ 跳动公差为0.002mm以内





Astra-SSH

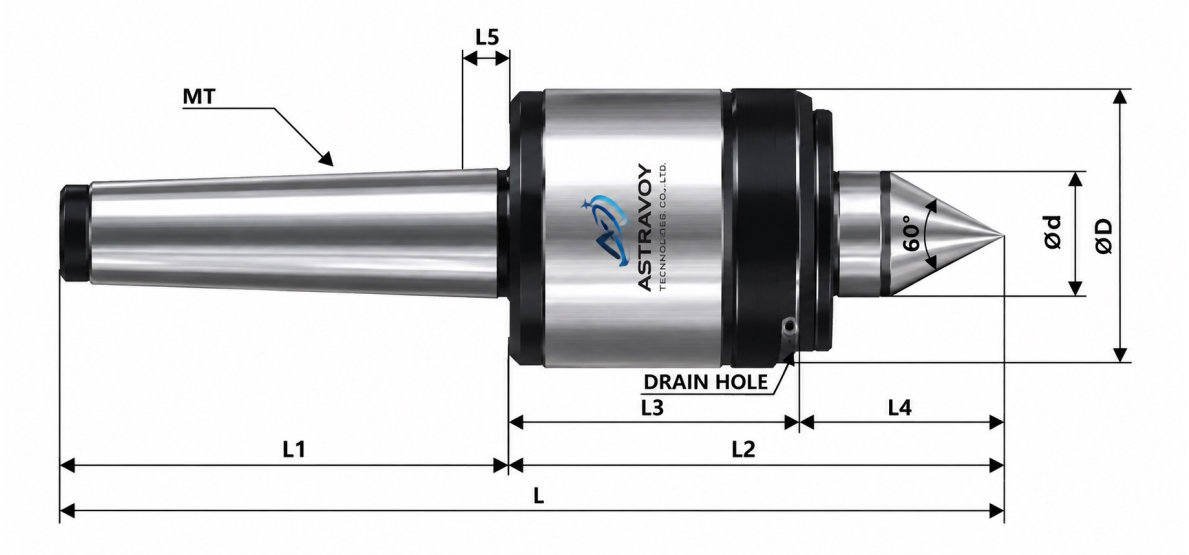

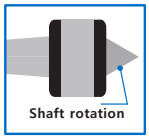



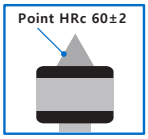



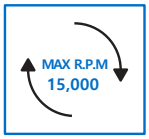

Dimension

Model No	Model	Morse Taper	Dimension								MAX Weight(kg)	MAX R.P.M	MAX Run Out(㎜)
			ΦD	Φd	L	L1	L2	L3	L4	L5			
1012002	2SSH	MT2	49	20	149	68	81	55.5	25.5	4.5	350	15,000	0.002
1012003	3SSH	MT3	49	20	166	85	81	55.5	25.5	4.5	350	15,000	0.002
1012004	4SSH	MT4	73	30	222	108	114	77	37	6	650	12,000	0.002
1012005	5SSH	MT5	73	30	250	136	114	77	37	6	650	12,000	0.002

HRC 58~62

▶Heat treatment hardness of center axis point HRC 58~62

▶顶尖头的热处理硬度为 HRC 58-62

Maximum R.P.M based on Workpiece weight.

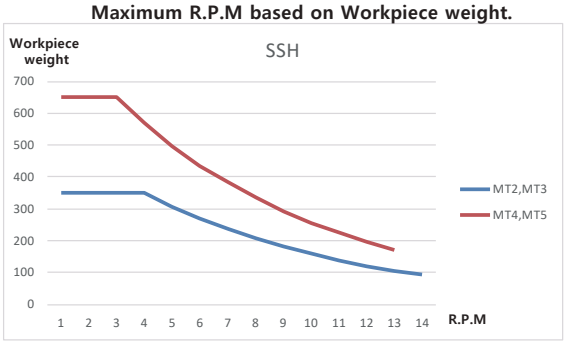

Astra-SSHC

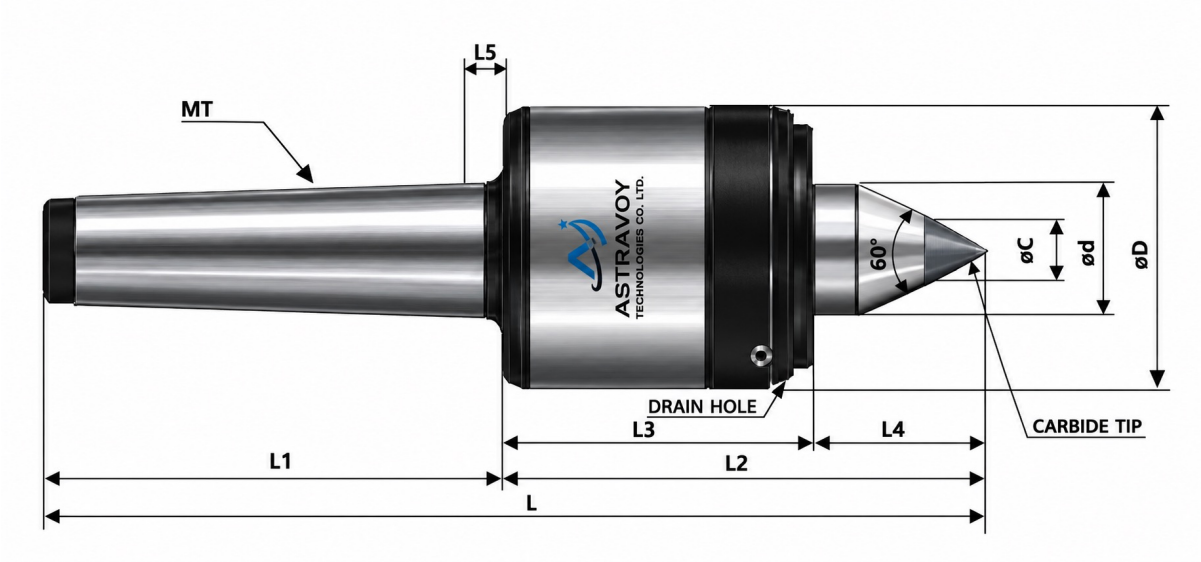

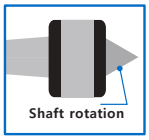



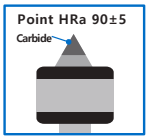





Dimension

Model No	Model	Morse Taper	Dimension									MAX Weight(kg)	MAX R.P.M	MAX Run Out(㎜)
			ΦD	Φd	L	L1	L2	L3	L4	L5	ΦC			
1012012	2SSHC	MT2	49	20	149	68	81	55.5	25.5	4.5	10	350	15,000	0.002
1012013	3SSHC	MT3	49	20	166	85	81	55.5	25.5	4.5	10	350	15,000	0.002
1012014	4SSHC	MT4	73	30	222	108	114	77	37	6	14	650	12,000	0.002
1012015	5SSHC	MT5	73	30	250	136	114	77	37	6	18	650	12,000	0.002

HRA 90~91

- ▶Center axis point Carbide type
- ▶Carbide hardness HRA 90~91
- ▶顶尖头部镶入硬质合金，耐磨性显著提高
- ▶硬质合金硬度为 HRA 90-91

Maximum R.P.M based on Workpiece weight.



Astra-SSHA

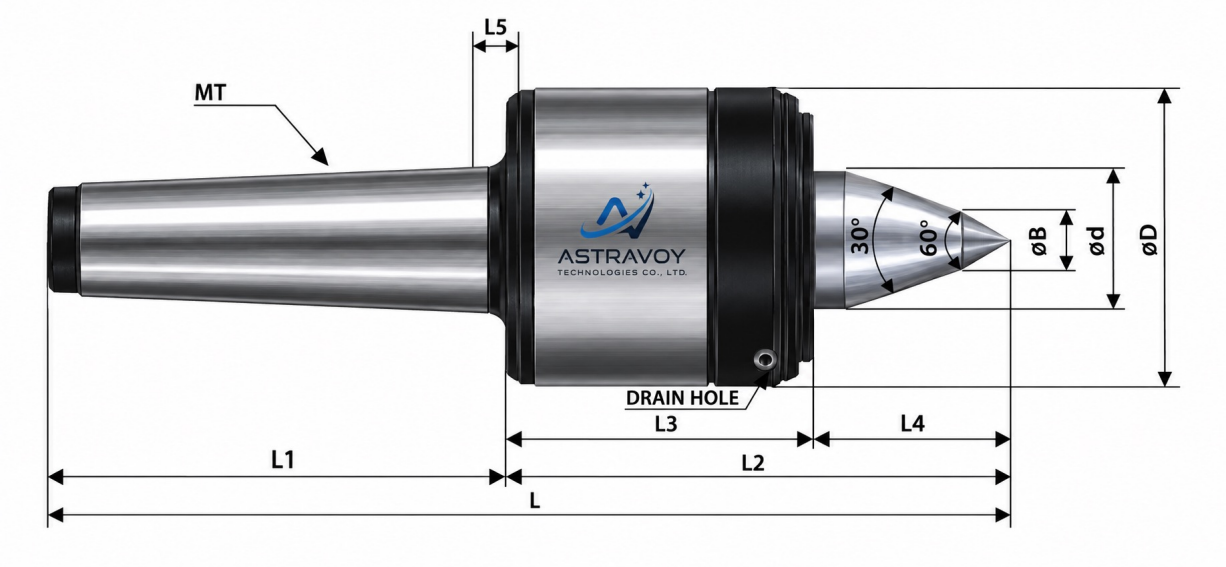

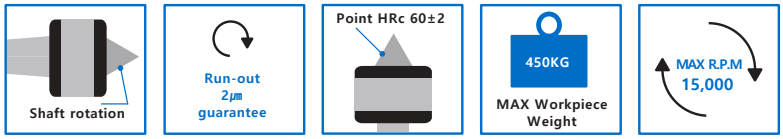

Dimension

Model No	Model	Morse Taper	Dimension									MAX Weight(kg)	MAX R.P.M	MAX Run Out(㎜)
			ΦD	Φd	L	L1	L2	L3	L4	L5	ΦB			
1012022	2SSHA	MT2	49	20	155.5	68	87.5	55.5	32	4.5	10	280	15,000	0.002
1012023	3SSHA	MT3	49	20	172.5	85	87.5	55.5	32	4.5	10	280	15,000	0.002
1012024	4SSHA	MT4	73	30	236	108	128	77	51	6	14	450	12,000	0.002
1012025	5SSHA	MT5	73	30	264	136	128	77	51	6	16	450	12,000	0.002

2
HRC 58~62

▶Two-level angular shape of the center axis point to minimize interference during processing
▶Heat treatment hardness of center shaft HRC 58~62
▶顶尖头部采用两段锥度设计，有效减少干涉
▶顶尖头的热处理硬度为 HRC 58-62

Maximum R.P.M based on Workpiece weight.



Astra-SSHAC

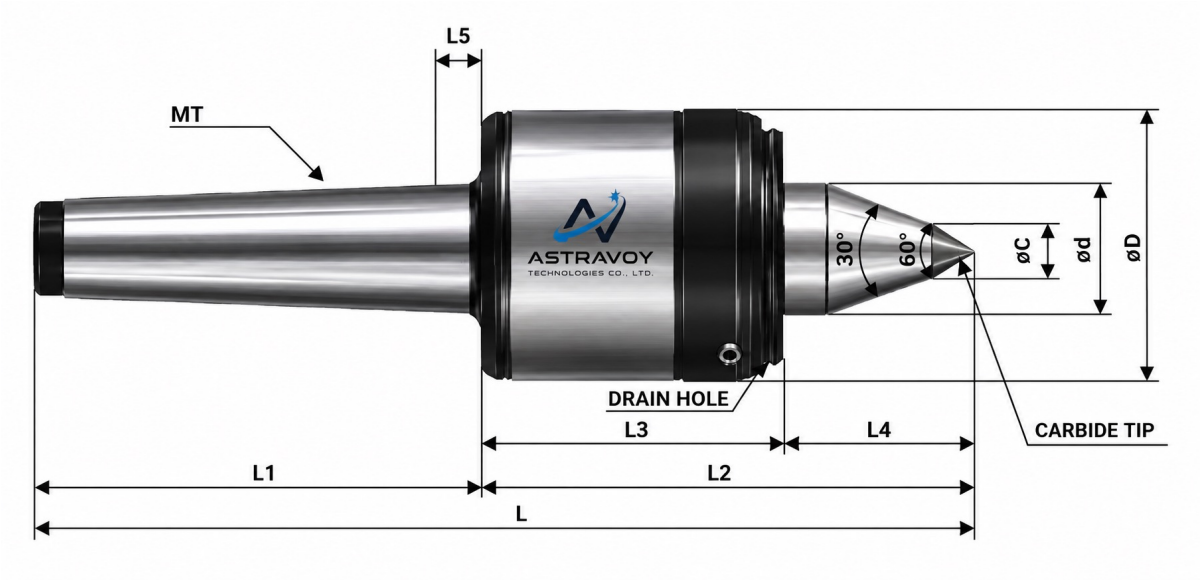



Dimension

Model No	Model	Morse Taper	Dimension									MAX Weight(kg)	MAX R.P.M	MAX Run Out(㎜)
			ΦD	Φd	L	L1	L2	L3	L4	L5	ΦC			
1012032	2SSHAC	MT2	49	20	155.5	68	87.5	55.5	32	4.5	10	280	15,000	0.002
1012033	3SSHAC	MT3	49	20	172.5	85	87.5	55.5	32	4.5	10	280	15,000	0.002
1012034	4SSHAC	MT4	73	30	236	108	128	77	51	6	14	450	12,000	0.002
1012035	5SSHAC	MT5	73	30	264	136	128	77	51	6	16	450	12,000	0.002

2

HRA 90~91

- ▶Two-level angular shape of the center axis point to minimize interference during processing
- ▶Center axis point Carbide type
- ▶Carbide hardness HRA 90~91
- ▶顶尖头部采用两段锥度设计，有效减少干涉
- ▶顶尖头部镶入硬质合金，耐磨性显著提高
- ▶硬质合金硬度为 HRA 90-91

Maximum R.P.M based on Workpiece weight.

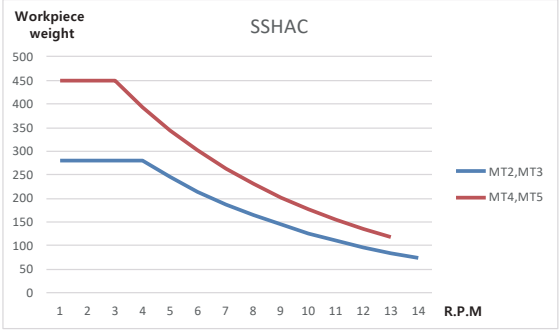

Astra-SSHAL / Astra-SSHALC

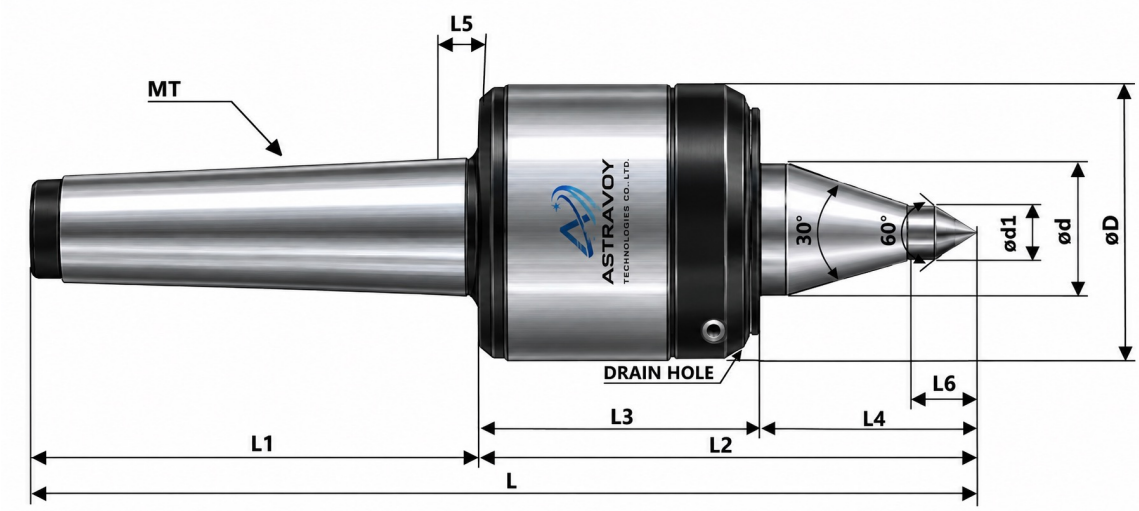

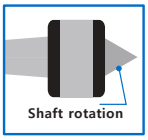







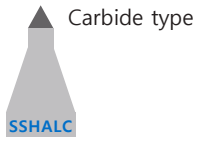

Dimension

Model No	Model	Morse Taper	Dimension										MAX Weight(kg)	MAX R.P.M	MAX Run Out(㎜)
			ΦD	Φd	L	L1	L2	L3	L4	L5	L6	Φd1			
1012042	2SSHAL	MT2	49	20	166.5	68	98.5	55.5	43	4.5	19	10	250	15,000	0.002
1012043	3SSHAL	MT3	49	20	183.5	85	98.5	55.5	43	4.5	19	10	250	15,000	0.002
1012044	4SSHAL	MT4	73	30	246.5	108	138.5	77	61.5	6	23.5	12.5	390	12,000	0.002
1012045	5SSHAL	MT5	73	30	274.5	136	138.5	77	61.5	6	23.5	12.5	390	12,000	0.002
1012052	2SSHALC	MT2	49	20	166.5	68	98.5	55.5	43	4.5	19	10	250	15,000	0.002
1012053	3SSHALC	MT3	49	20	183.5	85	98.5	55.5	43	4.5	19	10	250	15,000	0.002
1012054	4SSHALC	MT4	73	30	246.5	108	138.5	77	61.5	6	23.5	12.5	390	12,000	0.002
1012055	5SSHALC	MT5	73	30	274.5	136	138.5	77	61.5	6	23.5	12.5	390	12,000	0.002

3
HRC 58~62
HRA 90~91

- ▶3-level angular shape of the center axis point to minimize interference during processing
- ▶Heat treatment hardness of center shaft HRC 58~62
- ▶Carbide hardness HRA 90~91
- ▶最大限度减少刀具干涉
- ▶顶尖头的热处理硬度为 HRC 58-62
- ▶硬质合金硬度为 HRA 90-91

Maximum R.P.M based on Workpiece weight.

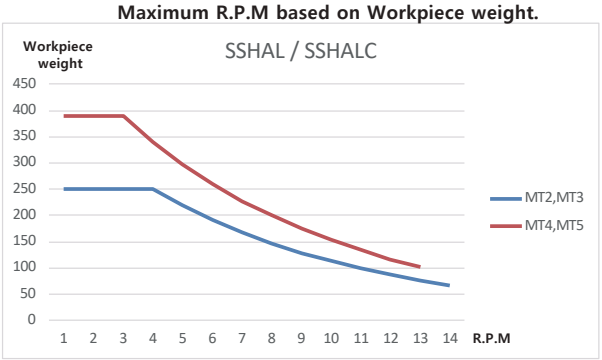

WN Series

Slim head waterproof type



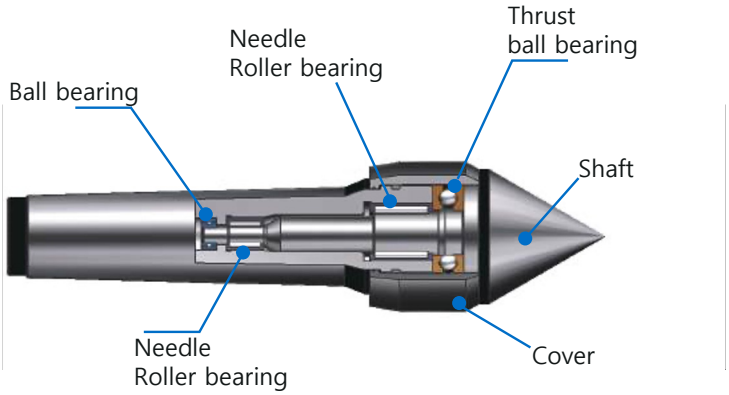

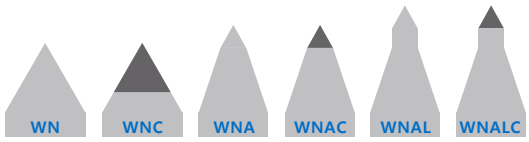

Center Point type

HEAD

RUN OUT 0.003mm

- ▶ HEAD rotation type
- ▶ Minimized the body for reducing the bite-interference
- ▶ RUN OUT - Max 0.003mm

- ▶ HEAD 旋转型
- ▶ 减少工件干涉 本体旋转顶尖部分缩小
- ▶ 跳动精度0.003以内



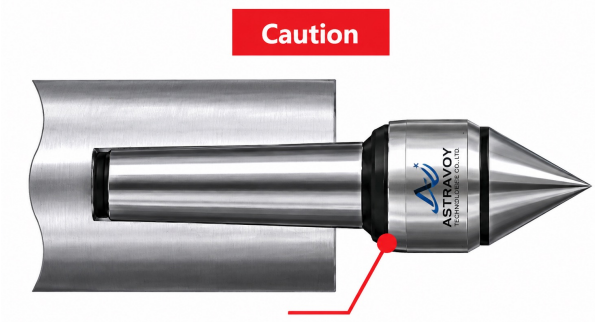

If physical force is applied to this part,
the product may be damaged.

Astra-WN

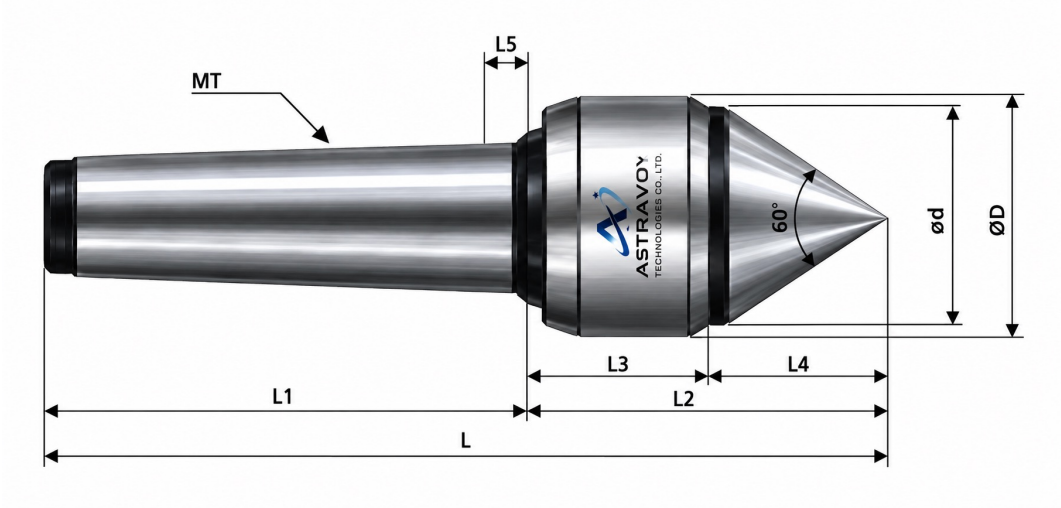

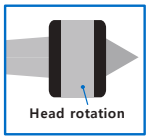



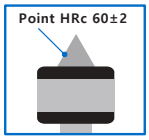





Dimension

Model No	Model	Morse Taper	Dimension								MAX Weight(kg)	MAX R.P.M	MAX Run Out(㎜)
			ΦD	Φd	L	L1	L2	L3	L4	L5			
1004002	2WN	MT2	30	27	123	75	48	22	26	4.5	200	4,000	0.003
1004003	3WN	MT3	35	32	144.2	89	55.2	25	30.2	5	400	3,000	0.003
1004004	4WN	MT4	48	43	191	116	75	35	40	6	700	3,000	0.003
1004005	5WN	MT5	62	57	238	144	94	40.4	53.6	8	1,300	2,000	0.003

HRC 58~62

▶Heat treatment hardness of center axis point HRC 58~62

▶顶尖头的热处理硬度为 HRC 58-62

Maximum R.P.M based on Workpiece weight.

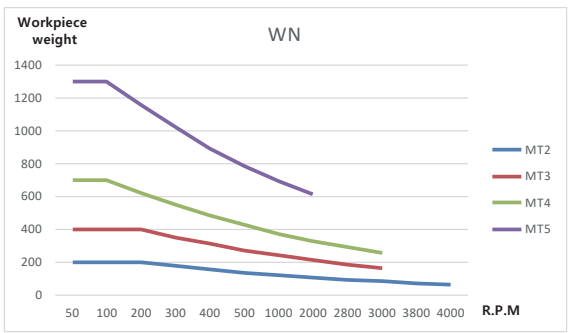

Astra-WNC

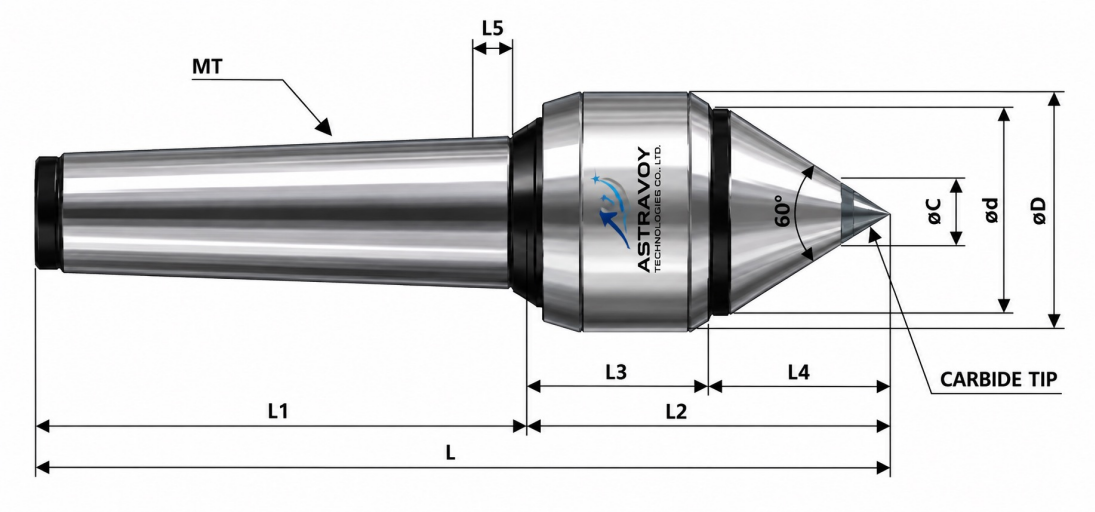

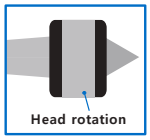



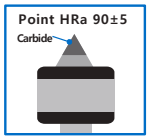





Dimension

Model No	Model	Morse Taper	Dimension									MAX Weight(kg)	MAX R.P.M	MAX Run Out(㎜)
			ΦD	Φd	L	L1	L2	L3	L4	L5	ΦC			
1004012	2WNC	MT2	30	27	123	75	48	22	26	4.5	10	200	4,000	0.003
1004013	3WNC	MT3	35	32	144.2	89	55.2	25	30.2	5	10	400	3,000	0.003
1004014	4WNC	MT4	48	43	191	116	75	35	40	6	14	700	3,000	0.003
1004015	5WNC	MT5	62	57	238	144	94	40.4	53.6	8	18	1,300	2,000	0.003

HRA 90~91

- Center axis point Carbide type
- Carbide hardness HRA 90~91
- 顶尖头部镶入硬质合金，耐磨性显著提高
- 硬质合金硬度为 HRA 90-91

Maximum R.P.M based on Workpiece weight.

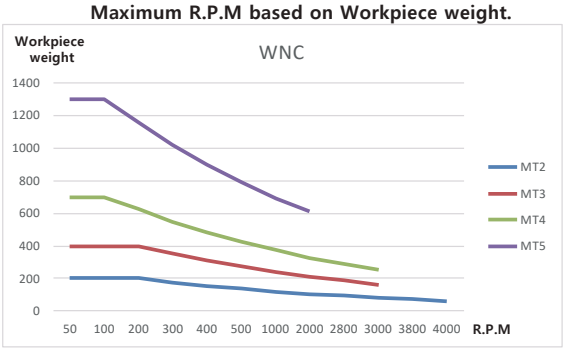

Astra-WNA

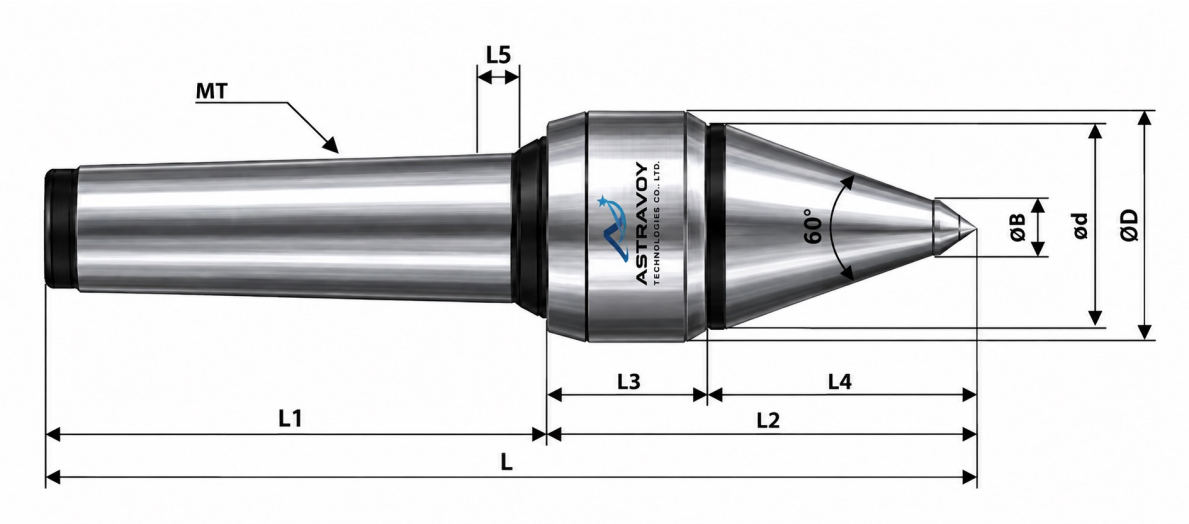

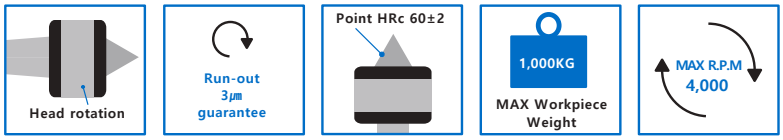

Dimension

Model No	Modle	Morse Taper	Dimension									MAX Weight(kg)	MAX R.P.M	MAX Run Out(㎜)
			ΦD	Φd	L	L1	L2	L3	L4	L5	ΦB			
1004022	2WNA	MT2	30	27	140	75	65	22	43	4.5	10	120	4,000	0.003
1004023	3WNA	MT3	35	32	168	89	79	25	54	5	10	320	3,000	0.003
1004024	4WNA	MT4	48	43	220	116	104	35	69	6	14	550	3,000	0.003
1004025	5WNA	MT5	62	57	279	144	135	40.4	94.6	8	16	1,000	2,000	0.003

2
HRC 58~62

- ▶Two-level angular shape of the center axis point to minimize interference during processing
- ▶Heat treatment hardness of center shaft HRC 58~62
- ▶顶尖头部采用两段锥度设计，有效减少干涉
- ▶顶尖头的热处理硬度为 HRC 58-62

Maximum R.P.M based on Workpiece weight.

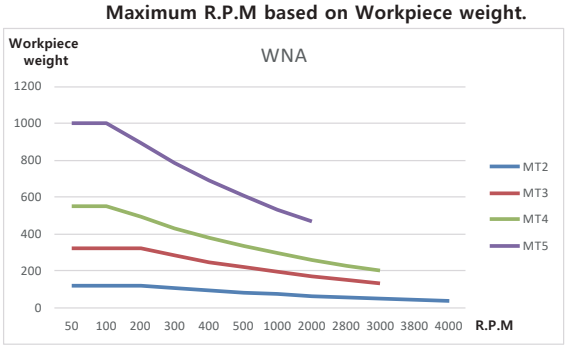

Astra-WNAC

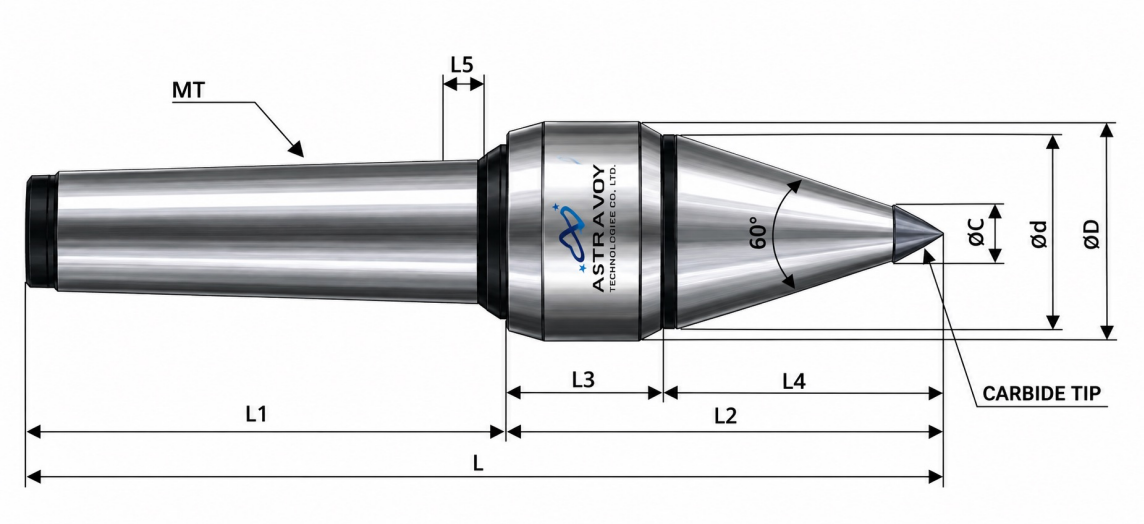

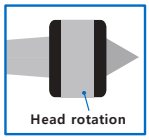









Dimension

Model No	Model	Morse Taper	Dimension									MAX Weight(kg)	MAX R.P.M	MAX Run Out(㎜)
			ΦD	Φd	L	L1	L2	L3	L4	L5	ΦC			
1004032	2WNAC	MT2	30	27	140	75	65	22	43	4.5	10	120	4,000	0.003
1004033	3WNAC	MT3	35	32	168	89	79	25	54	5	10	320	3,000	0.003
1004034	4WNAC	MT4	48	43	220	116	104	35	69	6	14	550	3,000	0.003
1004035	5WNAC	MT5	62	57	279	144	135	40.4	94.6	8	16	1,000	2,000	0.003

2

HRA 90~91

- ▶Two-level angular shape of the center axis point to minimize interference during processing
- ▶Center axis point Carbide type
- ▶Carbide hardness HRA 90~91
- ▶顶尖头部采用两段锥度设计，有效减少干涉
- ▶顶尖头部镶入硬质合金，耐磨性显著提高
- ▶硬质合金硬度为 HRA 90-91

Maximum R.P.M based on Workpiece weight.

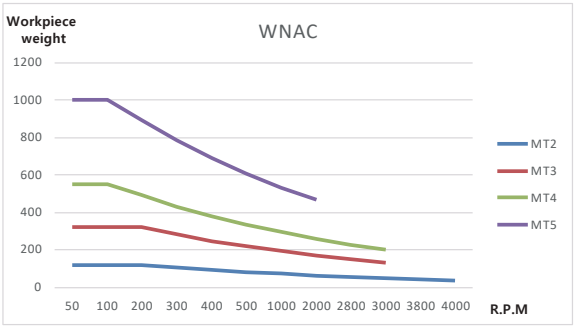

Astra-WNAL / Astra-WNALC

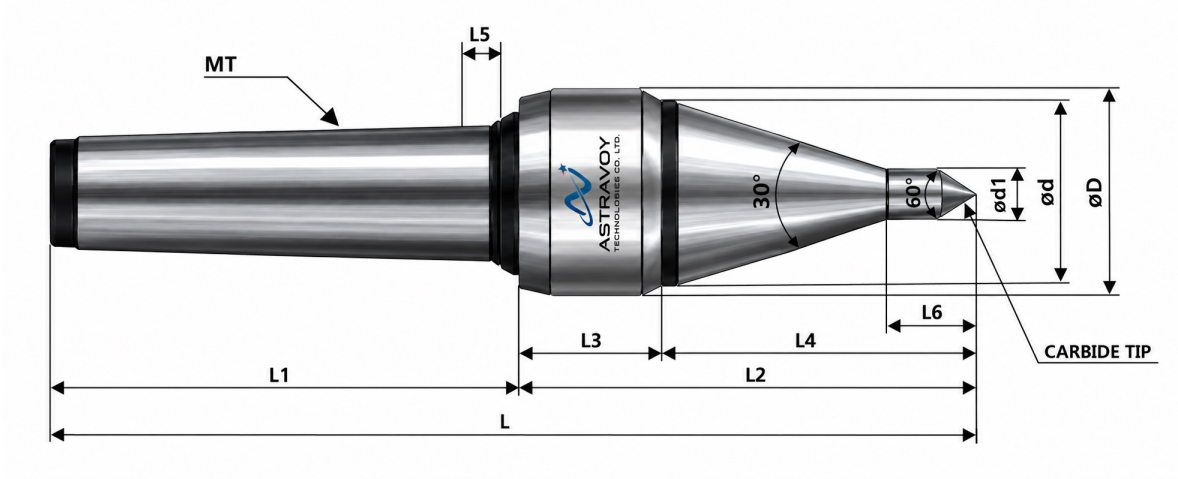

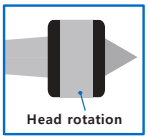









Carbide type

Dimension

Model No	Model	Morse Taper	Dimension										MAX Weight(kg)	MAX R.P.M	MAX Run Out(㎜)
			ΦD	Φd	L	L1	L2	L3	L4	L5	L6	Φd1			
1004042	2WNAL	MT2	30	27	143.8	75	68.8	22	46.8	4.5	12	10	100	4,000	0.003
1004043	3WNAL	MT3	35	32	172	89	83	25	58	5	14	10	280	3,000	0.003
1004044	4WNAL	MT4	48	43	234	116	118	35	83	6	22	12	500	3,000	0.003
1004045	5WNAL	MT5	62	57	294.4	144	150.4	40.4	110	8	21.4	12	900	2,000	0.003
1004052	2WNALC	MT2	30	27	143.8	75	68.8	22	46.8	4.5	12	10	100	4,000	0.003
1004053	3WNALC	MT3	35	32	172	89	83	25	58	5	14	10	280	3,000	0.003
1004054	4WNALC	MT4	48	43	234	116	118	35	83	6	22	12	500	3,000	0.003
1004055	5WNALC	MT5	62	57	294.4	144	150.4	40.4	110	8	21.4	12	900	2,000	0.003

3
HRC 58~62
HRA 90~91

- ▶3-level angular shape of the center axis point to minimize interference during processing
- ▶Heat treatment hardness of center shaft HRC 58~62
- ▶Carbide hardness HRA 90~91
- ▶最大限度减少刀具干涉
- ▶顶尖头的热处理硬度为 HRC 58-62
- ▶硬质合金硬度为 HRA 90-91

Maximum R.P.M based on Workpiece weight.

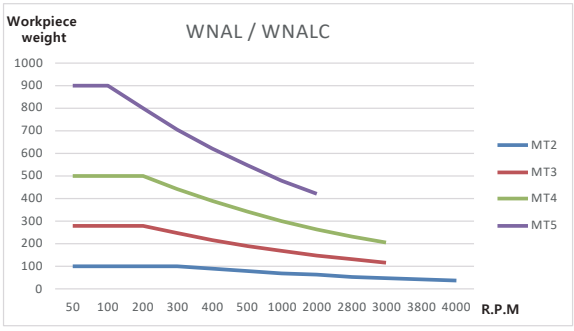

HB Series
For manual lathe



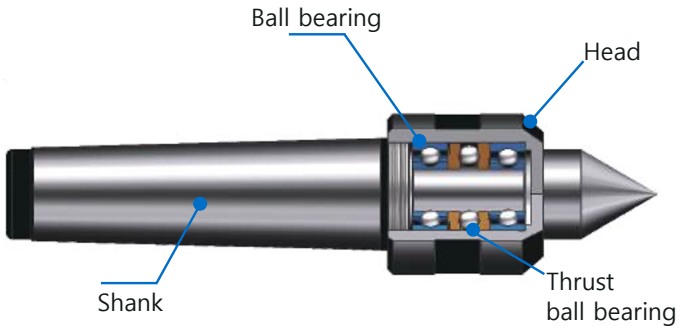

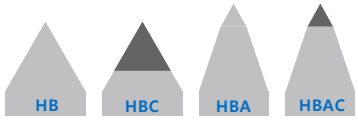

Center Point type

HEAD

0.003mm

- ▶ HEAD rotation type
- ▶ Suitable to elaborate turning operation such as manufacturing of small axis
- ▶ Degree of precision of rotation - Max 0.003mm

- ▶旋转型顶尖
- ▶小型轴加工及适用于精车刀
- ▶旋转精密度0.003以内

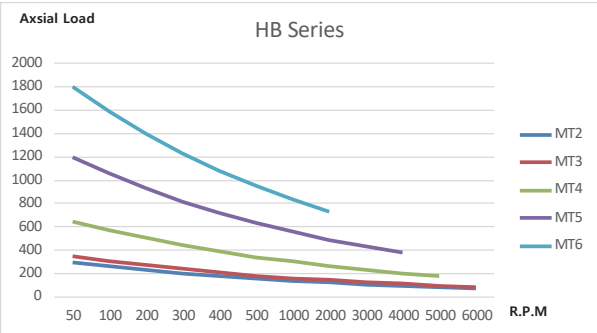

Astra-HB

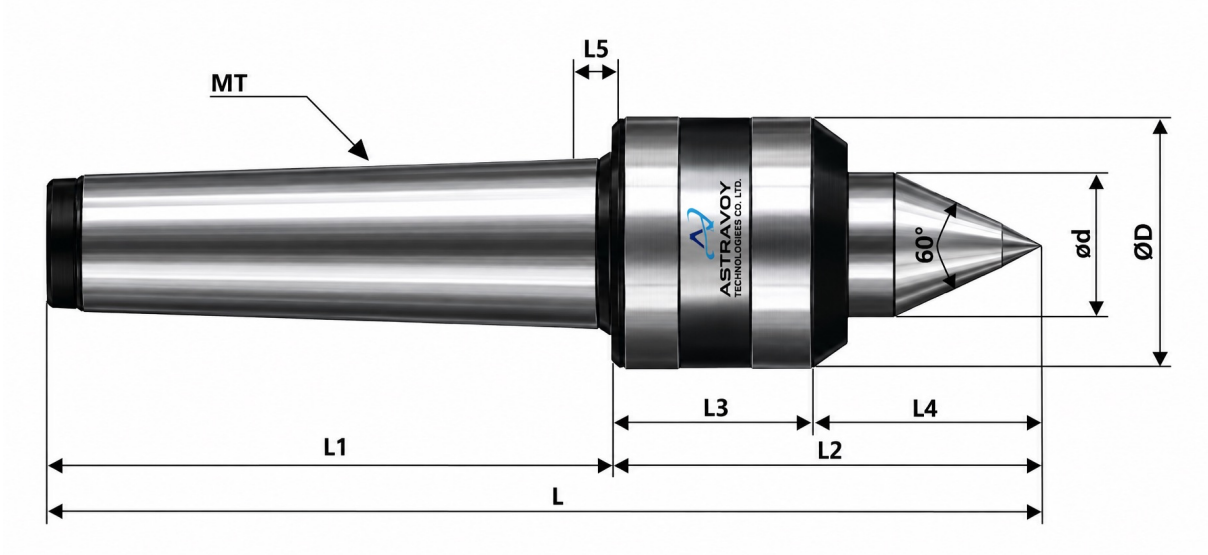

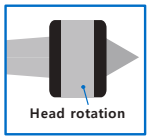



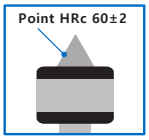



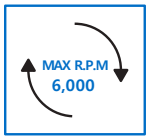

Dimension

Model No	Model	Morse Taper	Dimension								MAX Weight(kg)	MAX R.P.M	MAX Run Out(㎜)
			ΦD	Φd	L	L1	L2	L3	L4	L5			
1008002	2HB	MT2	38	18	124	68	56	35	21	6	300	6,000	0.003
1008003	3HB	MT3	38	18	141	85	56	35	21	6	400	6,000	0.003
1008004	4HB	MT4	45	25	184	108	76	44	32	5.3	600	5,000	0.003
1008005	5HB	MT5	63	28	229	136	93	58	35	6.3	750	4,000	0.003
1008006	6HB	MT6	102	55	333	189	144	82	62	10	1,200	2,000	0.003

HRC 58~62

- Heat treatment hardness of center axis point HRC 58~62
- Slim body
- 减少工件干涉 本体旋转顶尖部分缩小
- 顶尖部热处理硬度为 HRC 58-62

Maximum R.P.M based on Workpiece weight.

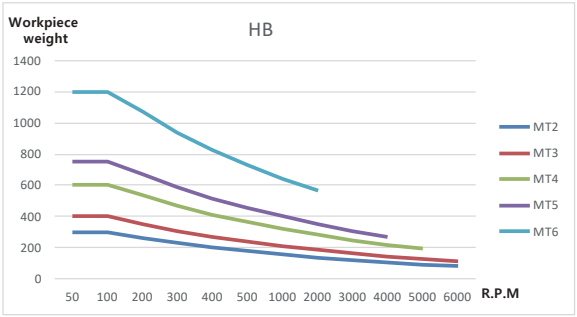

Astra-HBC

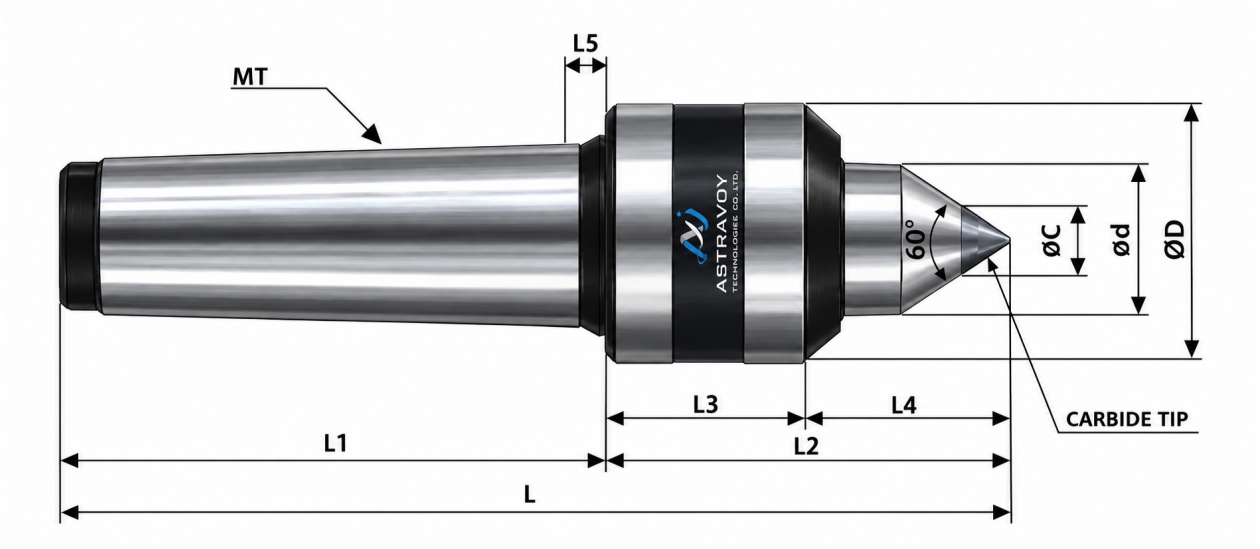

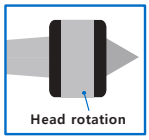









Dimension

Model No	Model	Morse Taper	Dimension									MAX Weight(kg)	MAX R.P.M	MAX Run Out(㎜)
			ΦD	Φd	L	L1	L2	L3	L4	L5	ΦC			
1008012	2HBC	MT2	38	18	124	68	56	35	21	6	10	300	6,000	0.003
1008013	3HBC	MT3	38	18	141	85	56	35	21	6	10	400	6,000	0.003
1008014	4HBC	MT4	45	25	184	108	76	44	32	5.3	12	600	5,000	0.003
1008015	5HBC	MT5	63	28	229	136	93	58	35	6.3	14	750	4,000	0.003

HRA 90~91

- ▶Center axis point Carbide type
- ▶Carbide hardness HRA 90~91
- ▶Slim body
- ▶减少工件干涉 本体旋转顶尖部分缩小
- ▶顶尖头部镶入硬质合金，耐磨性显著提高
- ▶硬质合金硬度为 HRA 90-91

Maximum R.P.M based on Workpiece weight.

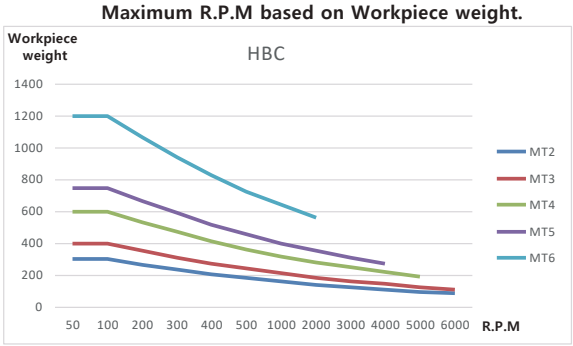

Astra-HBA

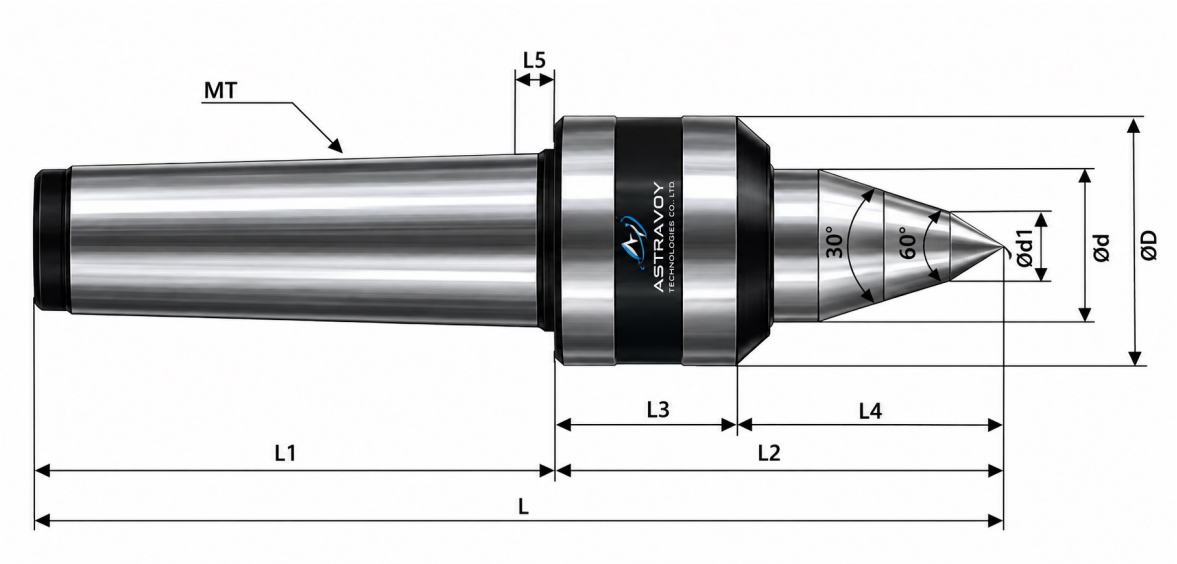

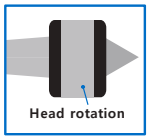



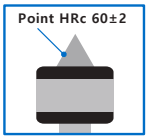





Dimension

Model No	Model	Morse Taper	Dimension									MAX Weight(kg)	MAX R.P.M	MAX Run Out(㎜)
			ΦD	Φd	L	L1	L2	L3	L4	L5	Φd1			
1008024	4HBA	MT4	45	25	194.2	108	86.2	44	42.2	5.3	12	600	5,000	0.003
1008025	5HBA	MT5	63	28	238	136	102	58	44	6.3	14	750	4,000	0.003

2
HRC 58~62

- ▶Two-level angular shape of the center axis point to minimize interference during processing
- ▶Heat treatment hardness of center shaft HRC 58~62
- ▶Slim body
- ▶顶尖头部采用两段锥度设计，有效减少干涉
- ▶顶尖头的热处理硬度为 HRC 58-62
- ▶减少工件干涉 本体旋转顶尖部分缩小

Maximum R.P.M based on Workpiece weight.

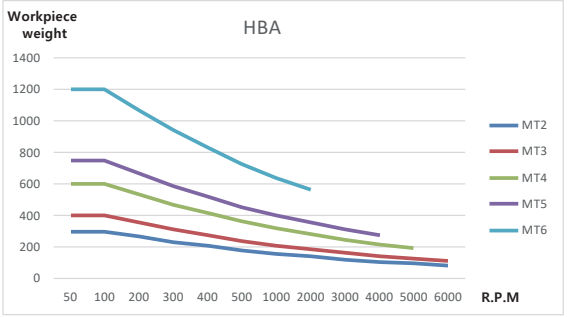

Astra-HBAC

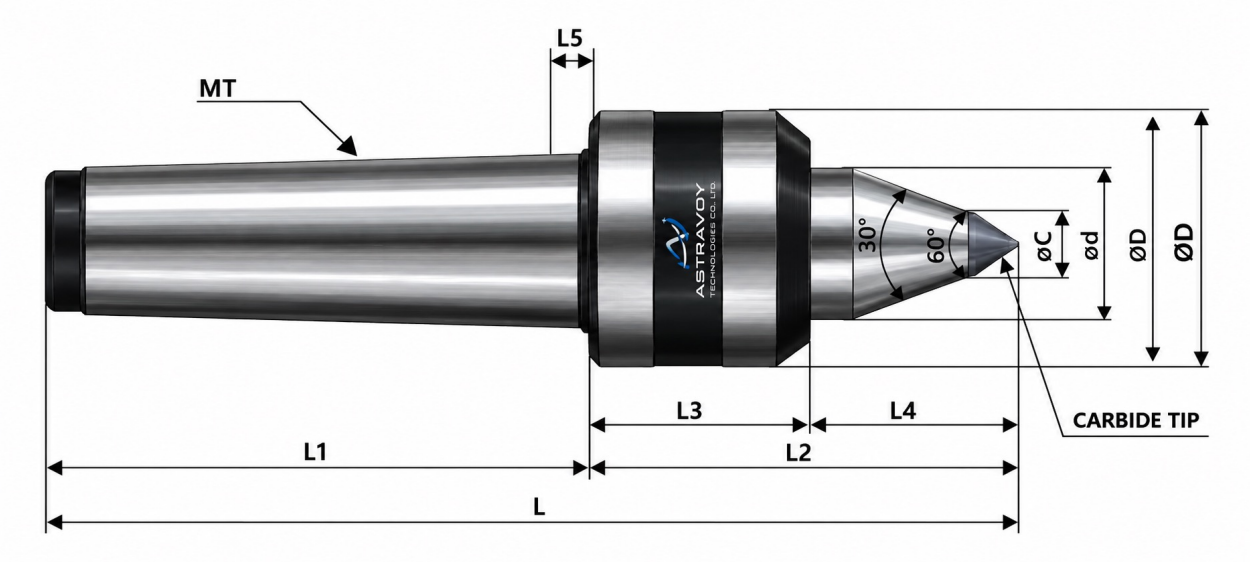

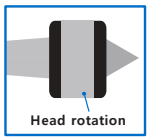



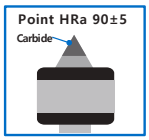





Dimension

Model No	Model	Morse Taper	Dimension									MAX Weight(kg)	MAX R.P.M	MAX Run Out(㎜)
			ΦD	Φd	L	L1	L2	L3	L4	L5	ΦC			
1008034	4HBAC	MT4	45	25	194.2	108	86.2	44	42.2	5.3	12	600	5,000	0.003
1008035	5HBAC	MT5	63	28	238	136	102	58	44	6.3	14	750	4,000	0.003

2

HRA 90~91

- ▶Two-level angular shape of the center axis point to minimize interference during processing
- ▶Center axis point Carbide type
- ▶Carbide hardness HRA 90~91
- ▶Slim body
- ▶减少工件干涉 本体旋转顶尖部分缩小
- ▶顶尖头部镶入硬质合金，耐磨性显著提高
- ▶硬质合金硬度为 HRA 90-91
- ▶顶尖头部采用两段锥度设计，有效减少干涉

Maximum R.P.M based on Workpiece weight.

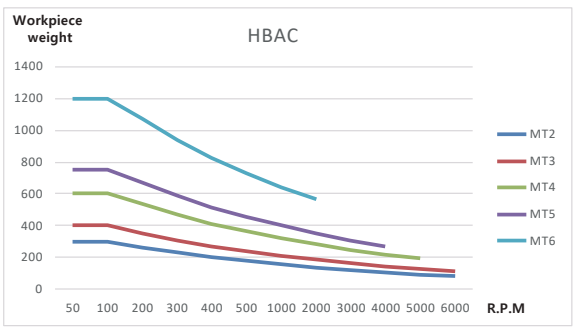

SHF Series

Live center dedicated to tailstock eccentric



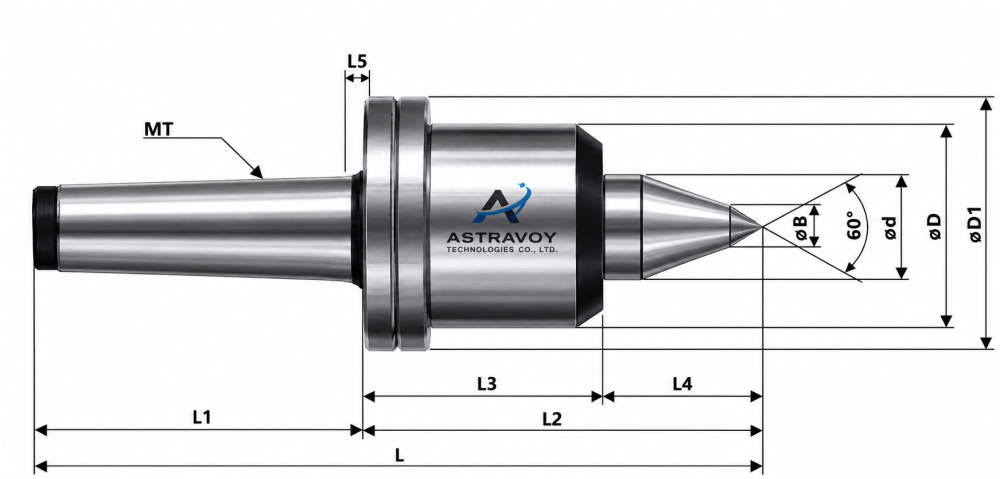

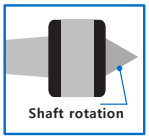



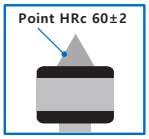



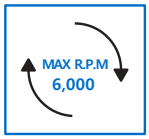

Dimension

Model No	Model	Morse Taper	Dimension									MAX Weight(kg)	MAX R.P.M	MAX Run Out(㎜)
			ΦD	ΦD1	Φd	L	L1	L2	L3	L4	ΦB			
1017004	4SHFA	MT4	66	89	32	248.2	108	140.2	83.2	57	14	1400	6,000	0.002
1017005	5SHFA	MT5	66	89	32	276.2	136	140.2	83.2	57	14	1400	6,000	0.002

2mm
,
V CAP
HRC58~62
2

▶If the center of the tailstock and chuck are not aligned, use the center to correct this
▶Maximum eccentricity adjustment 2mm
▶Can high-speed precision machining by using high-speed, high-precision bearings
▶Improving cutting oil inflow prevention function by applying special V seal and rotation cap
▶To enhance durability against impact, all parts have a heat treatment hardness of HRC58~62
▶Adopted two step angle to minimize byte interference

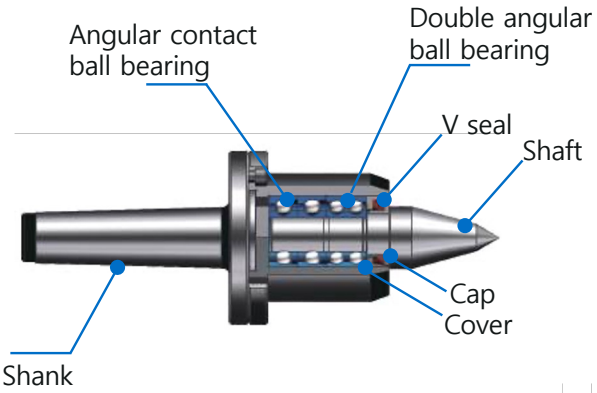

PC Series
Pipe center



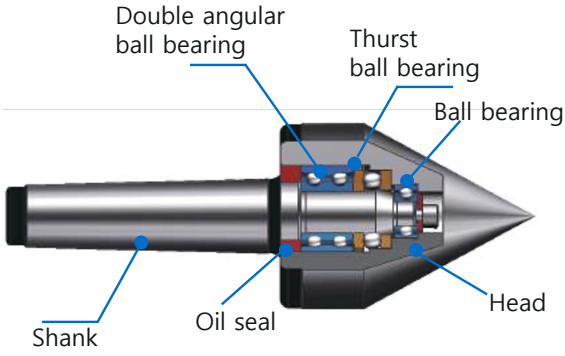

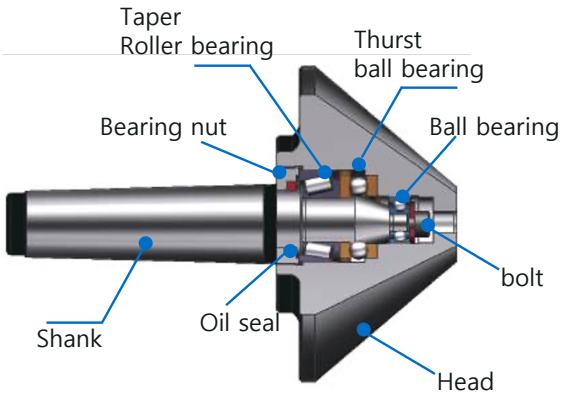

HEAD
RUN OUT 0.003mm

- ▶HEAD rotation type
- ▶RUN OUT - Max 0.003mm

- ▶HEAD旋转型
- ▶跳动精度0.003以内

Caution

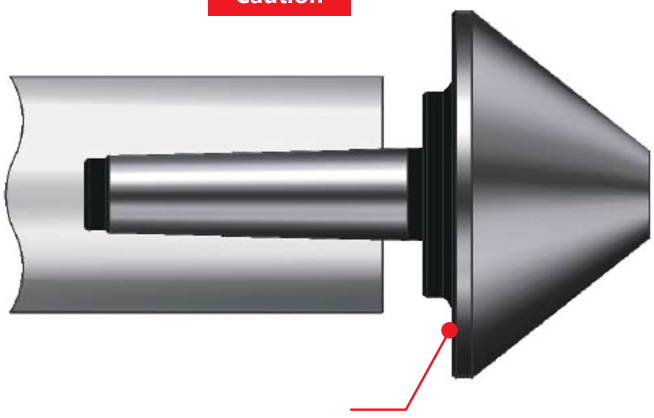

If physical force is applied to this part,
the product may be damaged.

Astra-PC80

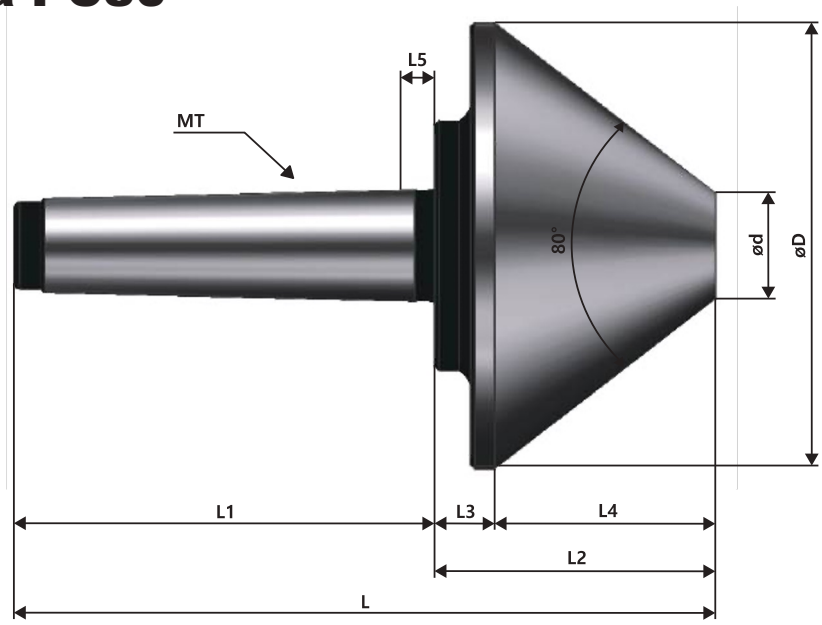

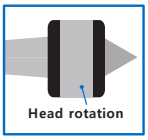



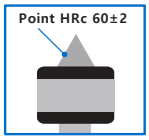





Dimension

Model No	Model	Morse Taper	Dimension								MAX Weight(kg)	MAX R.P.M	MAX Run Out(㎜)
			ΦD	Φd	L	L1	L2	L3	L4	L5			
1005023	3PC80	MT3	95	20	143	85	58	12.3	44.7	6	400	4,000	0.003
1005024	4PC80	MT4	125	30	180	108	72	15.4	56.6	8	800	3,000	0.003
1005025	5PC80	MT5	150	35	220	136	84	15.5	68.5	8	1,600	2,000	0.003
1005026	6PC80	MT6	200	38	305	189	116	19.5	96.5	10	2,500	1,500	0.003

head HRC 58~62
head NUT
80

▶Heat treatment hardness of center head HRC 58~62
▶Center head accuracy can be adjusted and supplemented with NUT.
▶Center axial point 80 degree
▶顶尖轴的跳动用来（NUT）螺帽可调使用
▶顶尖锥度为80°
▶顶尖部热处理硬度 HRC 58-62

Maximum R.P.M based on Workpiece weight.

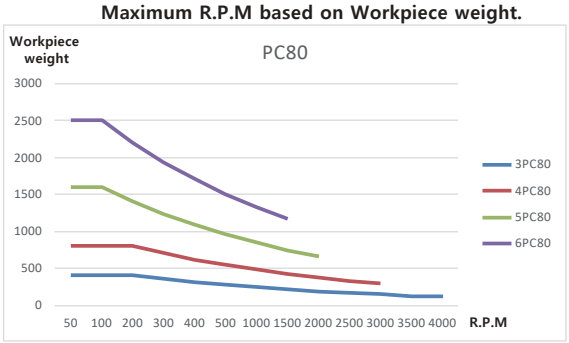

Astra-PC60

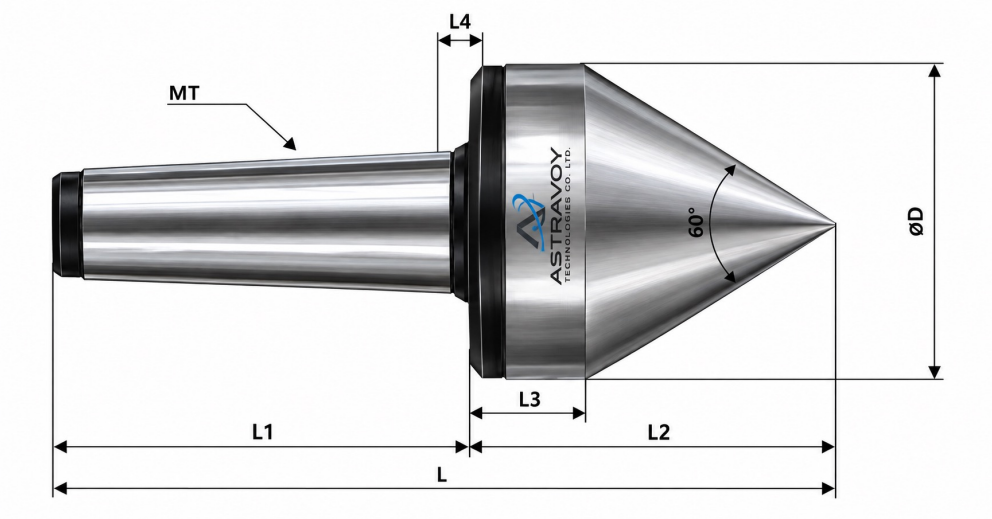

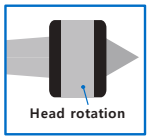



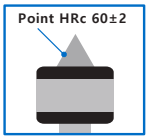





Dimension

Model No	Model	Morse Taper	Dimension						MAX Weight(kg)	MAX R.P.M	MAX Run Out(㎜)
			ΦD	L	L1	L2	L3	L4			
1005002	2PC60	MT2	44	134	68	66	28.3	6	400	5,000	0.003
1005003	3PC60	MT3	56	163	85	78	30	6	400	5,000	0.003
1005004	4PC60	MT4	78	208	108	100	33	8	800	3,800	0.003
1005005	5PC60	MT5	98	261	136	125	41	8	1,600	3,000	0.003
1005006	6PC60	MT6	118	343	189	154	52.7	10	2,500	2,800	0.003

head HRC 58~62
head NUT
60

▶Heat treatment hardness of center head HRC 58~62
▶Center head accuracy can be adjusted and supplemented with NUT.
▶Center axial point 60 degree
▶顶尖轴的跳动用来（NUT）螺帽可调使用
▶顶尖锥度为60°
▶顶尖部热处理硬度 HRC 58-62

Maximum R.P.M based on Workpiece weight.

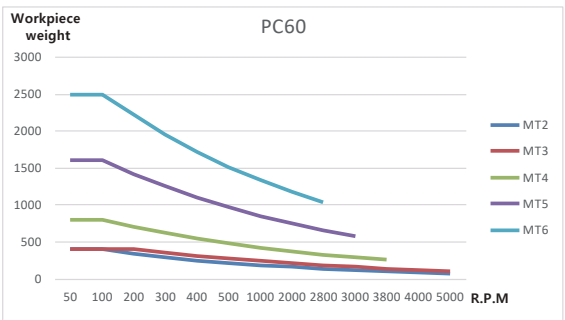

Astra-PC60L

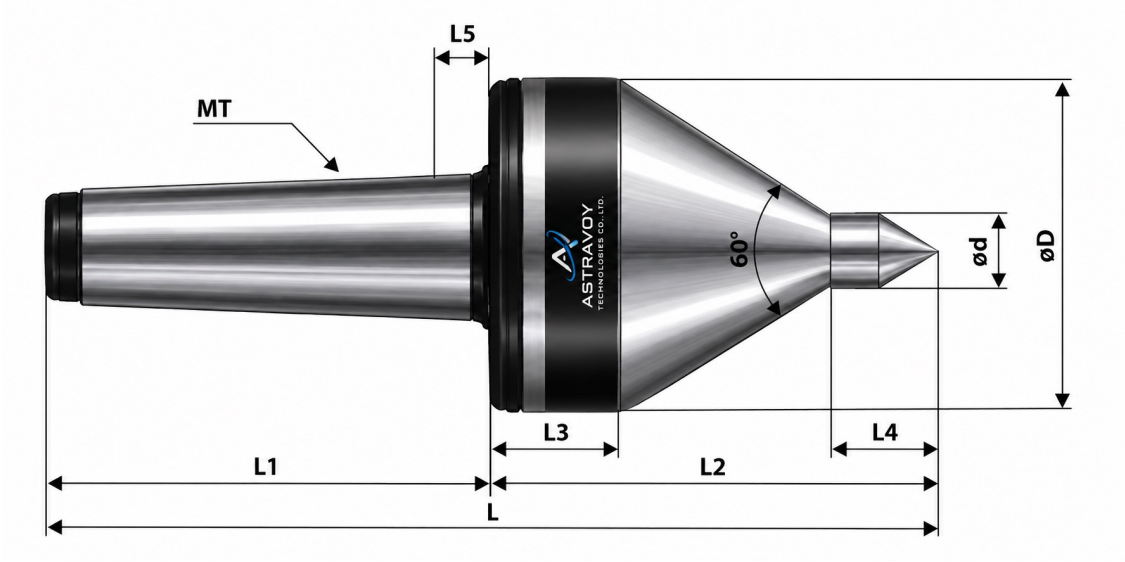

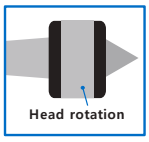



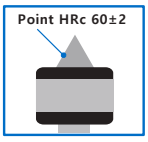





Dimension

Model No	Model	Morse Taper	Dimension								MAX Weight(kg)	MAX R.P.M	MAX Run Out(㎜)
			ΦD	Φd	L	L1	L2	L3	L4	L5			
1005012	2PC60L	MT2	44	12	147	68	79	31.3	20	6	300	5,000	0.003
1005013	3PC60L	MT3	56	12	173	85	88	30	20	6	300	5,000	0.003
1005014	4PC60L	MT4	78	16	218	108	110	33	23.4	8	550	3,800	0.003
1005015	5PC60L	MT5	98	19	276	136	140	41	30.6	8	1,200	3,000	0.003
1005016	6PC60L	MT6	118	20	353	189	164	46.1	33	10	2,000	2,800	0.003

2
head HRC 58~62
head NUT
60

▶Two-level angular shape of the center axis point to minimize interference during processing
▶Heat treatment hardness of center head HRC 58~62
▶Center head accuracy can be adjusted and supplemented with NUT.
▶Center axial point 60 degree
▶顶尖轴的跳动用来（NUT）螺帽可调使用
▶顶尖锥度为60°
▶顶尖部热处理硬度 HRC 58-62
▶顶尖头部采用两段锥度设计　有效减少干涉

Maximum R.P.M based on Workpiece weight.

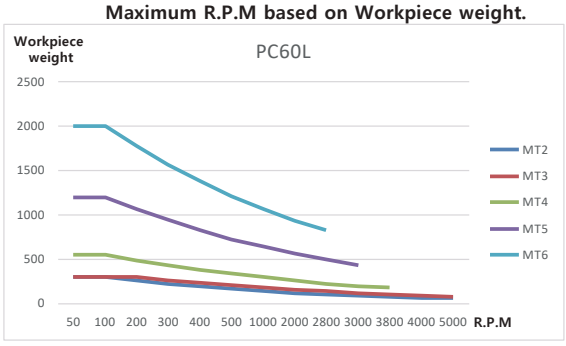

TH Series

For heavy cutting



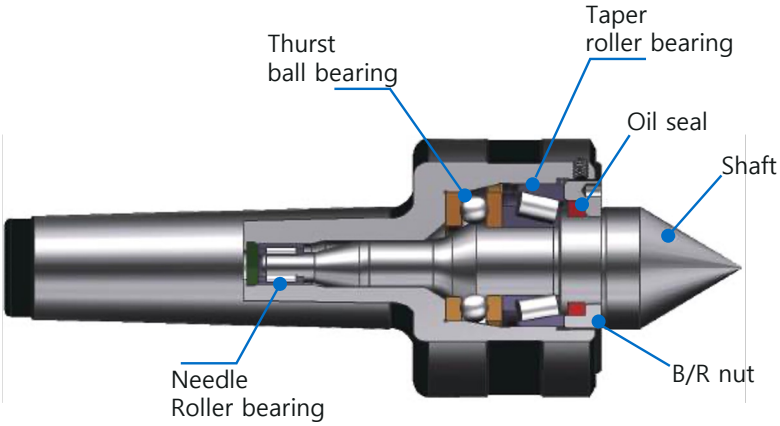

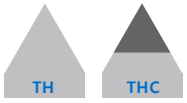

Center Point type

NUT
RUN OUT 0.003mm

- Adjustable to wobble of center axis by nut
- RUN OUT - Max 0.003mm

- 顶尖轴的跳动用来螺帽可调使用
- 跳动精度0.003以内

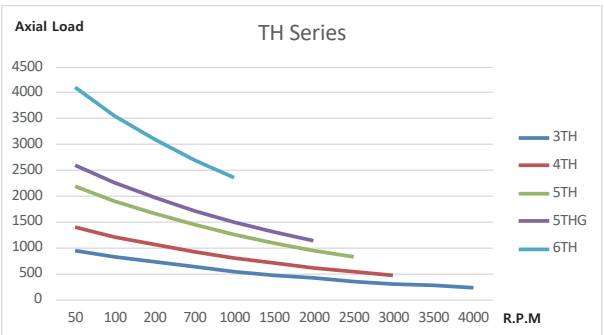

Astra-TH

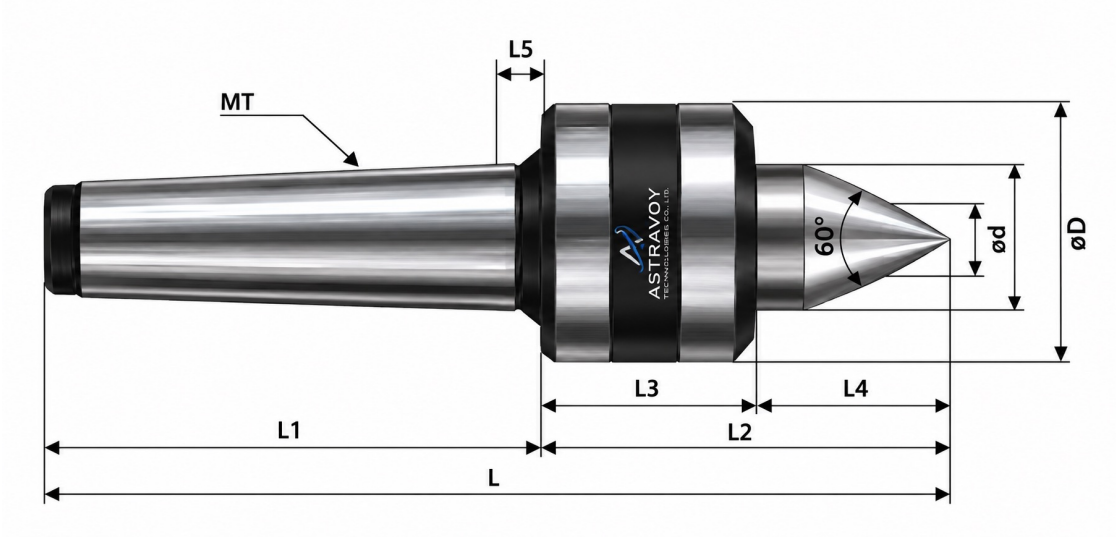

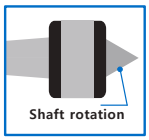



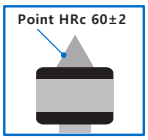





Dimension

Model No	Model	Morse Taper	Dimension								MAX Weight(kg)	MAX R.P.M	MAX Run Out(㎜)
			ΦD	Φd	L	L1	L2	L3	L4	L5			
1006003	3TH	MT3	49	25	154	85	69	43	26	6	500	4,000	0.003
1006004	4TH	MT4	66	31.4	194.5	108	86.5	49.5	37	8	1,000	3,000	0.003
1006005	5TH	MT5	81	40	242	136	106	61	45	8	2,000	2,500	0.003
1006005G	5THG	MT5	93	40	250	136	114	71	43	8	2,500	2,000	0.003
1006006	6TH	MT6	126	60	334.2	189	145.2	85.2	60	10	4,500	1,000	0.003

HRC 58~62

▶Heat treatment hardness of center axis point HRC 58~62

▶顶尖头的热处理硬度为 HRC 58-62

Maximum R.P.M based on Workpiece weight.

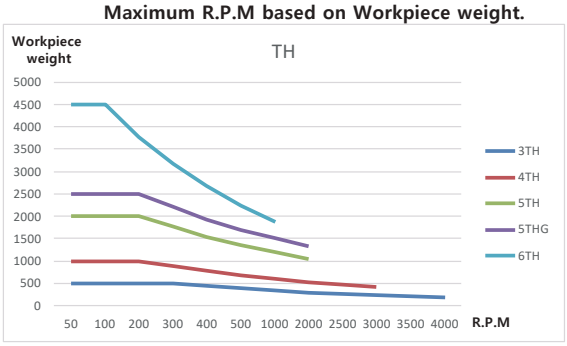

Astra-THC

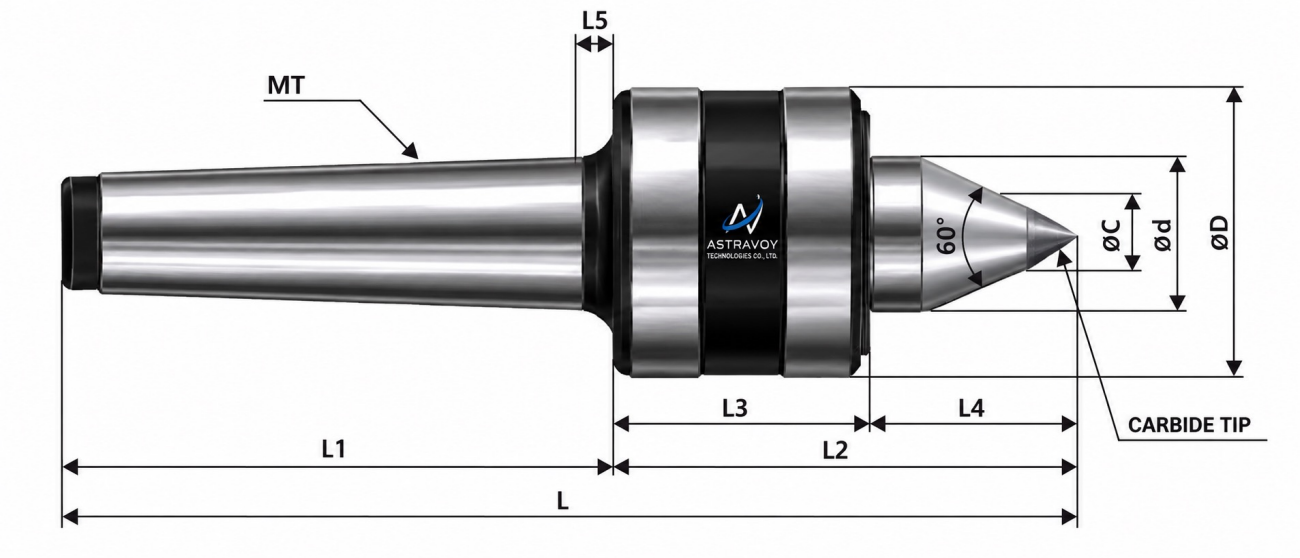

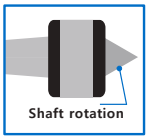









Dimension

Model No	Model	Morse Taper	Dimension									MAX Weight(kg)	MAX R.P.M	MAX Run Out(㎜)
			ΦD	Φd	L	L1	L2	L3	L4	L5	ΦC			
1006013	3THC	MT3	49	25	154	85	69	43	26	6	10	500	4,000	0.003
1006014	4THC	MT4	66	31.4	194.5	108	86.5	49.5	37	8	14	1,000	3,000	0.003
1006015	5THC	MT5	81	40	242	136	106	61	45	8	18	2,000	2,500	0.003
1006015G	5THGC	MT5	93	40	250	136	114	71	43	8	18	2,500	2,000	0.003
1006016	6THC	MT6	126	60	334.2	189	145.2	85.2	60	10	30	4,500	1,000	0.003

HRA 90~91
▶Center axis point Carbide type
▶Carbide hardness HRA 90~91
▶顶尖头部镶入硬质合金，耐磨性显著提高
▶硬质合金硬度为 HRA 90-91

Maximum R.P.M based on Workpiece weight.

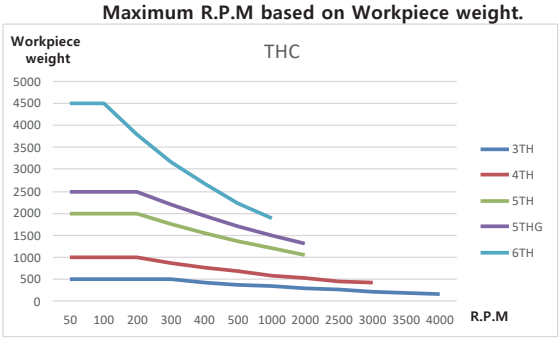

SR Series
Pressure display type



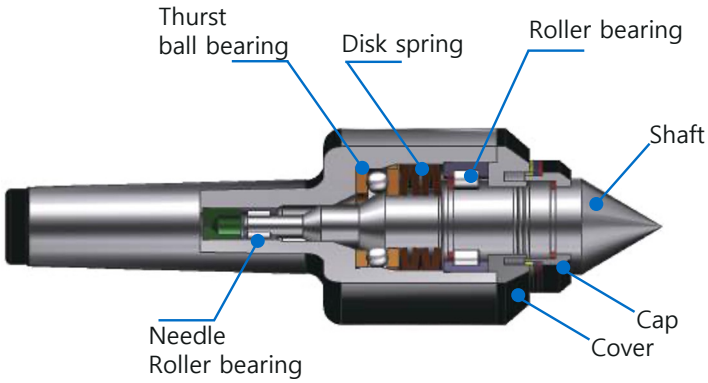

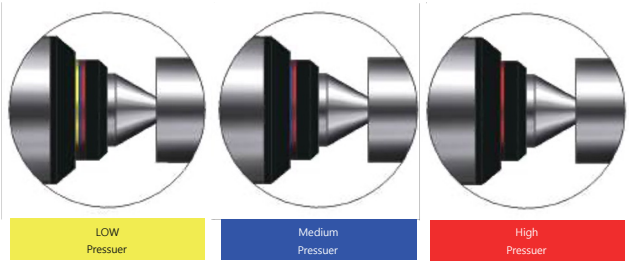

색상/품명	2SR	3SR	4SR	5SR
YELLOW	0~500 kgf	0~500 kgf	0~1,000 kgf	0~1,500 kgf
BLUE	500~1,500 kgf	500~1,500 kgf	1,000~2,000 kgf	1,500~3,000 kgf
RED	1,500~2,500 kgf	1,500~2,500 kgf	2,000~3,000 kgf	3,000~4,500 kgf

.
FACE DRIVER
RUN OUT 0.003mm

- You can easily tell the support of a workpiece
- When used with a face driver, it is possible to minimize wear on spindle bearings due to continuous impact.
- Runout - Max 0.003mm

- 轻松掌握工件的支撑力
- 配合使用FACE DRIVER，可以最小化由于持续撞击引起的主轴轴承的磨损
- RUN OUT 0.003mm 以内

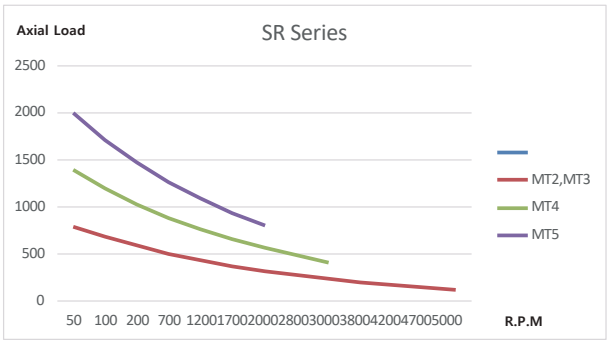

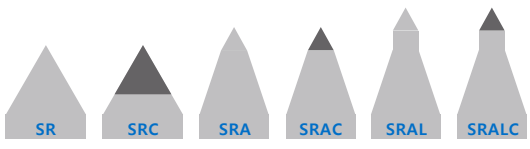

Center Point type

Astra-SR

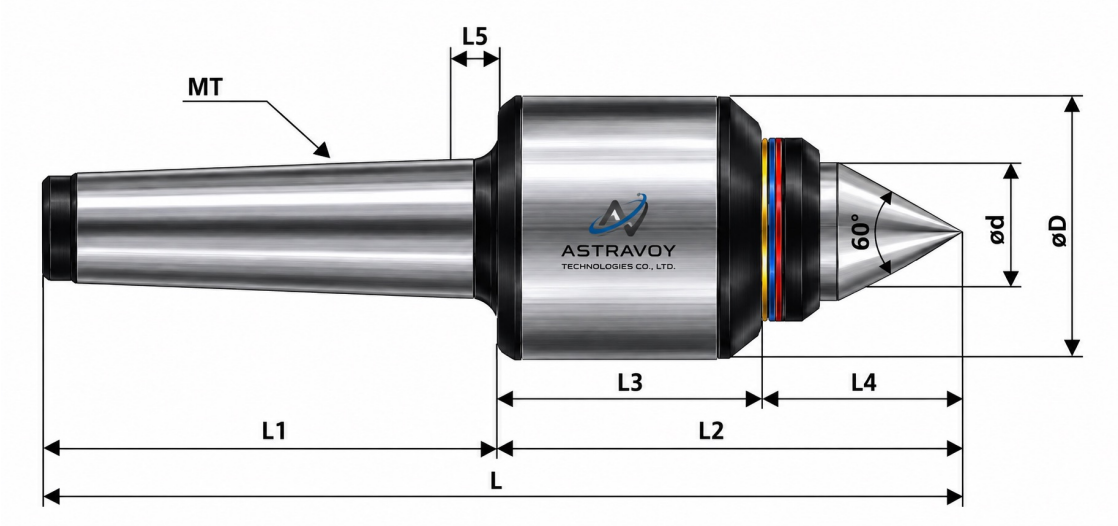

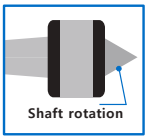



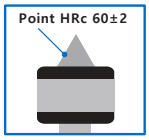





Dimension

Model No	Model	Morse Taper	Dimension								MAX Weight(kg)	MAX R.P.M	MAX Run Out(㎜)
			ΦD	Φd	L	L1	L2	L3	L4	L5			
1001502	2SR	MT2	50	25	155	68	87	52.6	34.4	6	400	5,000	0.003
1001503	3SR	MT3	50	25	172	85	87	52.6	34.4	6	700	5,000	0.003
1001504	4SR	MT4	65	32	223	108	115	70	45	8	1,200	3,000	0.003
1001505	5SR	MT5	94	55	294	136	158	88	70	8	2,000	2,000	0.003

HRC 58~62

▶Heat treatment hardness of center axis point HRC 58~62

▶顶尖头的热处理硬度为 HRC 58-62

Maximum R.P.M based on Workpiece weight.

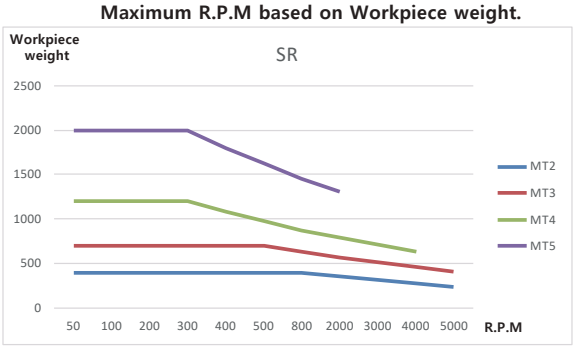

Astra-SRC

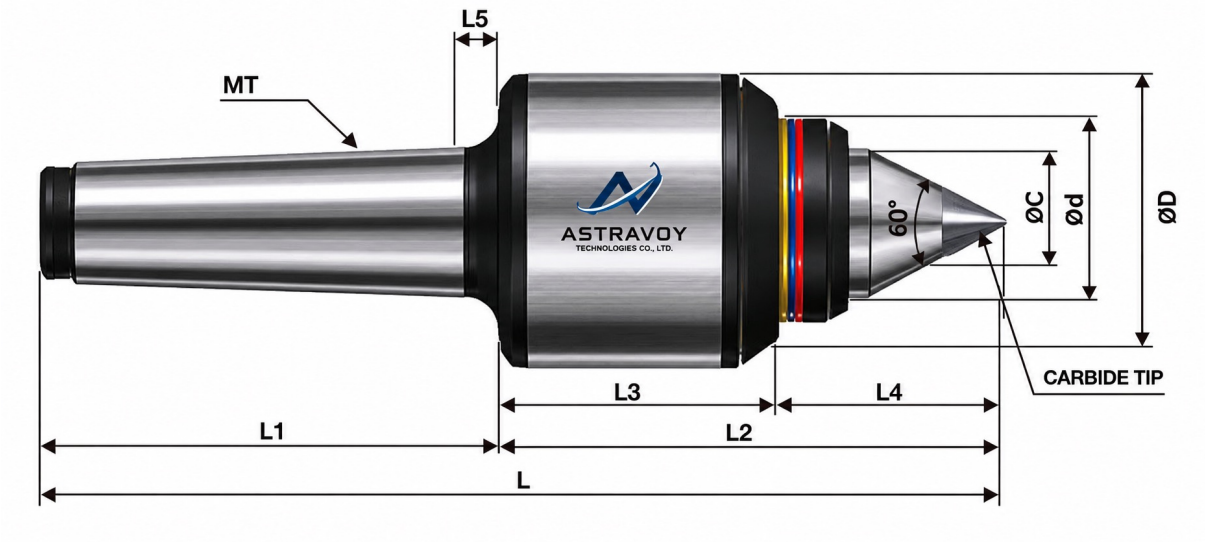



Dimension

Model No	Model	Morse Taper	Dimension									MAX Weight(kg)	MAX R.P.M	MAX Run Out(㎜)
			ΦD	Φd	L	L1	L2	L3	L4	L5	ΦC			
1001512	2SRC	MT2	50	25	155	68	87	52.6	34.4	6	10	400	5,000	0.003
1001513	3SRC	MT3	50	25	172	85	87	52.6	34.4	6	10	700	5,000	0.003
1001514	4SRC	MT4	65	32	223	108	115	70	45	8	14	1,200	3,000	0.003
1001515	5SRC	MT5	94	55	294	136	158	88	70	8	18	2,000	2,000	0.003

HRA 90~91
▶Center axis point Carbide type
▶Carbide hardness HRA 90~91
▶顶尖头部镶入硬质合金，耐磨性显著提高
▶硬质合金硬度为 HRA 90-91

Maximum R.P.M based on Workpiece weight.

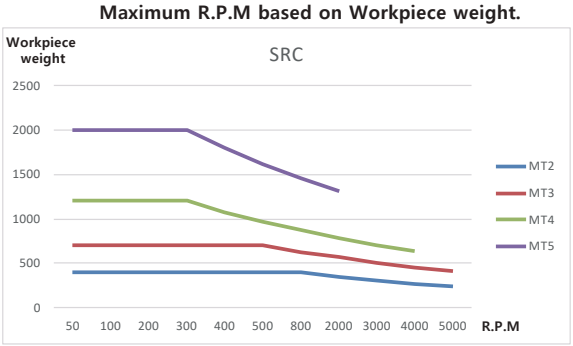

Astra-SRA

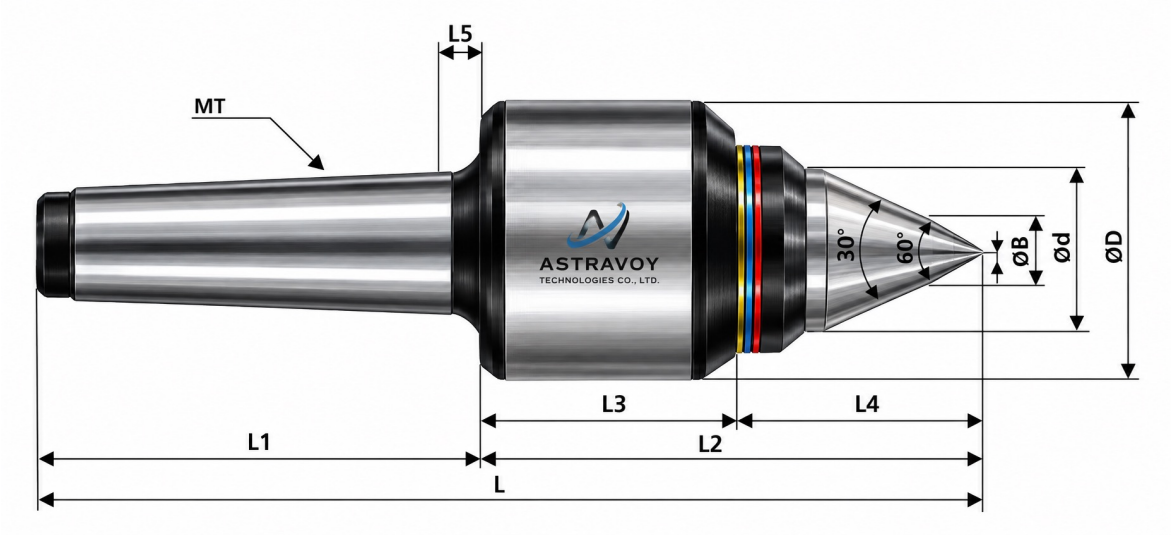

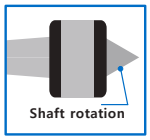



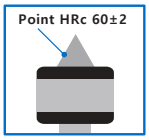



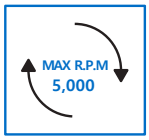

Dimension

Model No	Model	Morse Taper	Dimension									MAX Weight(kg)	MAX R.P.M	MAX Run Out(㎜)
			ΦD	Φd	L	L1	L2	L3	L4	L5	ΦB			
1001522	2SRA	MT2	50	25	172	68	104	52.6	51.4	6	10	320	5,000	0.003
1001523	3SRA	MT3	50	25	189	85	104	52.6	51.4	6	10	560	5,000	0.003
1001524	4SRA	MT4	65	32	240	108	132	70	62	8	14	960	3,000	0.003
1001525	5SRA	MT5	94	55	329	136	193	88	105	8	18	1,600	2,000	0.003

2
HRC 58~62

▶Two-level angular shape of the center axis point to minimize interference during processing
▶Heat treatment hardness of center shaft HRC 58~62
▶顶尖头部采用两段锥度设计，有效减少干涉
▶顶尖头的热处理硬度为 HRC 58-62

Maximum R.P.M based on Workpiece weight.

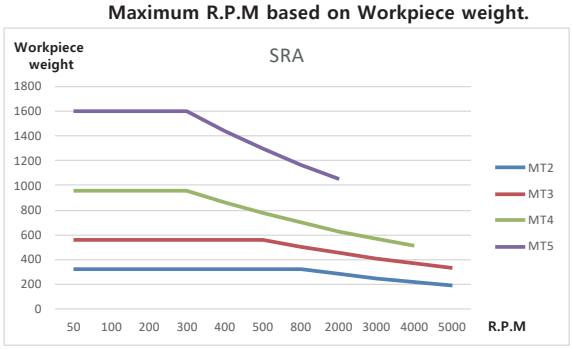

Astra-SRAC

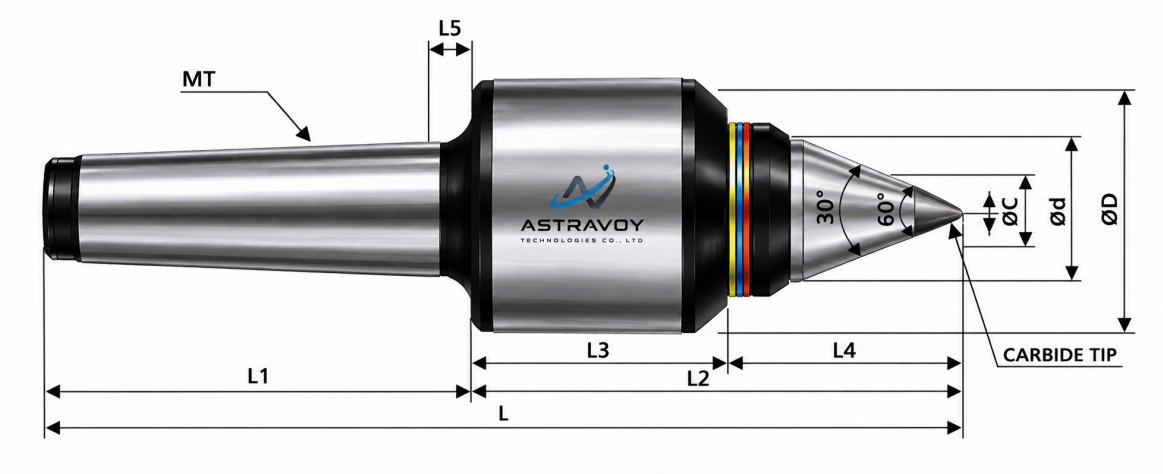

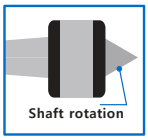



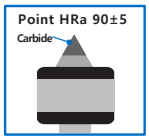





Dimension

Model No	Model	Morse Taper	Dimension									MAX Weight(kg)	MAX R.P.M	MAX Run Out(㎜)
			ΦD	Φd	L	L1	L2	L3	L4	L5	ΦC			
1001532	2SRAC	MT2	50	25	172	68	104	52.6	51.4	6	10	320	5,000	0.003
1001533	3SRAC	MT3	50	25	189	85	104	52.6	51.4	6	10	560	5,000	0.003
1001534	4SRAC	MT4	65	32	240	108	132	70	62	8	14	960	3,000	0.003
1001535	5SRAC	MT5	94	55	329	136	193	88	105	8	18	1,600	2,000	0.003

2

HRA 90~91

▶Two-level angular shape of the center axis point to minimize interference during processing
▶Center axis point Carbide type
▶Carbide hardness HRA 90~91
▶顶尖头部采用两段锥度设计，有效减少干涉
▶顶尖头部镶入硬质合金，耐磨性显著提高
▶ 硬质合金硬度为 HRA 90-91

Maximum R.P.M based on Workpiece weight.



Astra-SRAL / Astra-SRALC

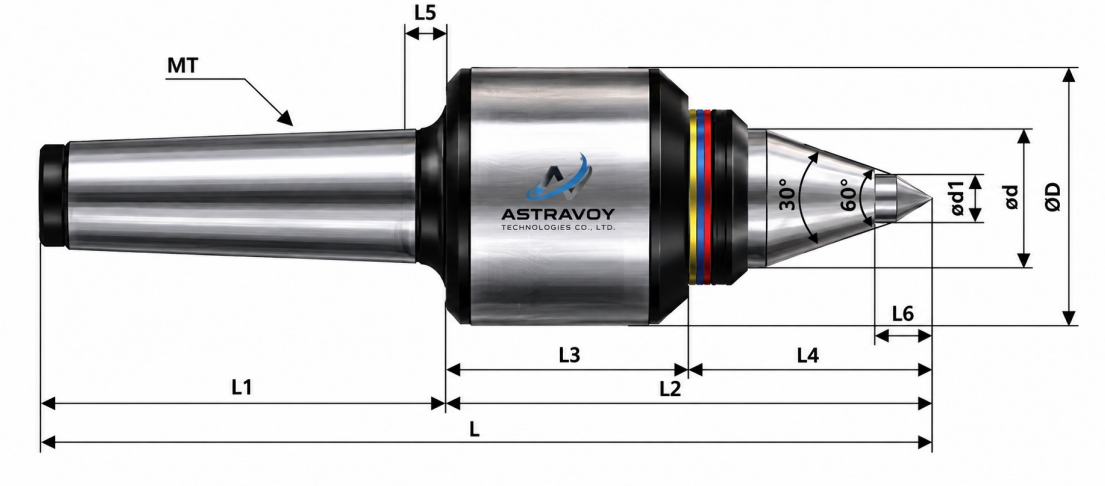

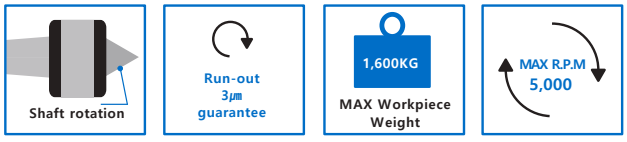

Dimension

Model No	Model	Morse Taper	Dimension										MAX Weight(kg)	MAX R.P.M	MAX Run Out(㎜)
			ΦD	Φd	L	L1	L2	L3	L4	L5	L6	Φd1			
1001542	2SRAL	MT2	50	25	177	68	109	52.6	56.4	6	13.2	10	320	5,000	0.003
1001543	3SRAL	MT3	50	25	194	85	109	52.6	56.4	6	13.2	10	560	5,000	0.003
1001544	4SRAL	MT4	65	32	250.5	108	142.5	70	58.5	8	18.5	12	960	3,000	0.003
1001545	5SRAL	MT5	94	55	344	136	208	88	120	8	22.7	14	1,600	2,000	0.003
1001552	2SRALC	MT2	50	25	177	68	109	52.6	56.4	6	13.2	10	320	5,000	0.003
1001553	3SRALC	MT3	50	25	194	85	109	52.6	56.4	6	13.2	10	560	5,000	0.003
1001554	4SRALC	MT4	65	32	250.5	108	142.5	70	58.5	8	18.5	12	960	3,000	0.003
1001555	5SRALC	MT5	94	55	344	136	208	88	120	8	22.7	14	1,600	2,000	0.003

3
HRC 58~62
HRA 90~91

- ▶3-level angular shape of the center axis point to minimize interference during processing
- ▶Heat treatment hardness of center shaft HRC 58~62
- ▶Carbide hardness HRA 90~91
- ▶最大限度减少刀具干涉
- ▶顶尖头的热处理硬度为 HRC 58-62
- ▶硬质合金硬度为 HRA 90-91

Maximum R.P.M based on Workpiece weight.

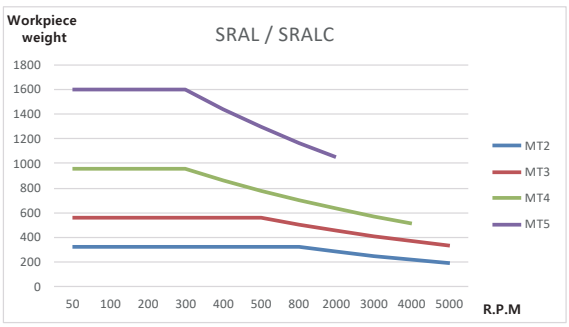

HG Series

For heavy weight workpiece



OIL SEAL,
HRC 58~62

- Large workpiece machining center
- Special oil seal, Adoption of contactless (Coolant and oreign matter to prevent infiltration)
- Heat treatment hardness of center axis, HRC 58~62

- 重型工件加工顶尖
- 采用特殊油封，有效防止切削液和异物质进入
- 顶尖部热处理硬度为 HRC 58-62

Order Production Huge Center | 大型顶尖订做



NSR-HG120S (30 TON)

Astra-HG

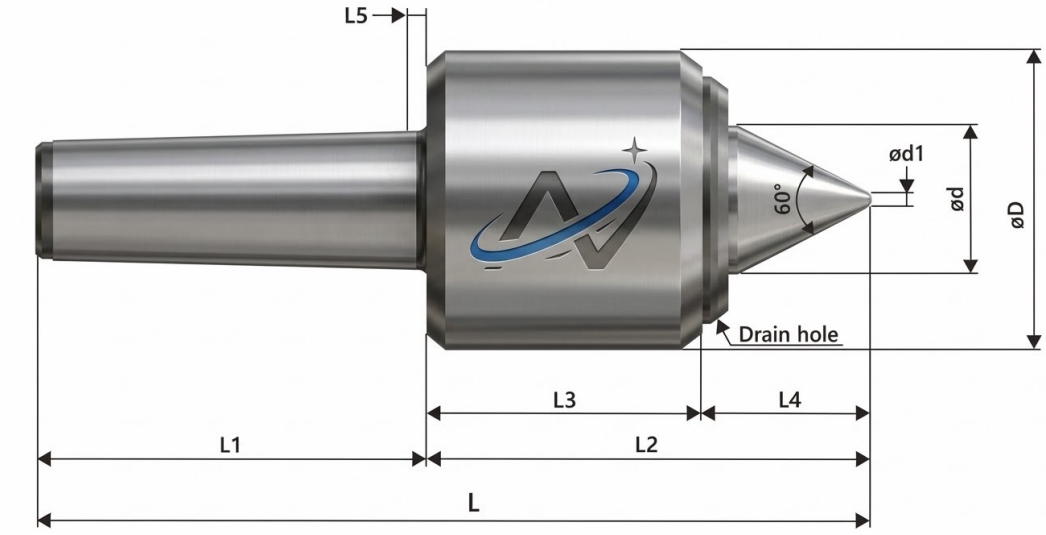

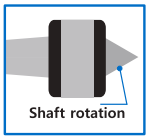



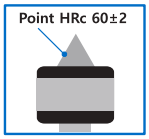





Dimension

Model No	Model	Morse Taper	Dimension									MAX Weight(kg)	MAX R.P.M	MAX Run Out(mm)
			ΦD	Φd	Φd1	L	L1	L2	L3	L4	L5			
1006G60	6THG(60°)	MT6	165	79	3	400.7	191	209.7	138	71.7	12	8.000	800	0.005
1006G75	6THG(75°)					384.4		193.4		55.4				
1007G60	7THG(60°)	MT7	165	79	3	469.7	260	209.7	138	71.7	12	10.000	800	0.005
1007G75	7THG(75°)					453.4		193.4		55.4				
HG80	HG80	1:10	178	109	3	442.3	203	239.3	138	101.3	10	10.000	850	0.005
		1:20												
HG100	HG100	1:10	218	109	3	534.6	250	284.6	193	91.6	10	15.000	750	0.005
		1:20												
HG120	HG120	1:10	310	124	3	619.5	268.5	351	242.5	108.4	15	25.000	500	0.005
		1:20												

size
- ▶Large grinding center
- ▶Special size production possible
- ▶大型磨削顶尖（其他锥度非标订做）

Astra-HGN

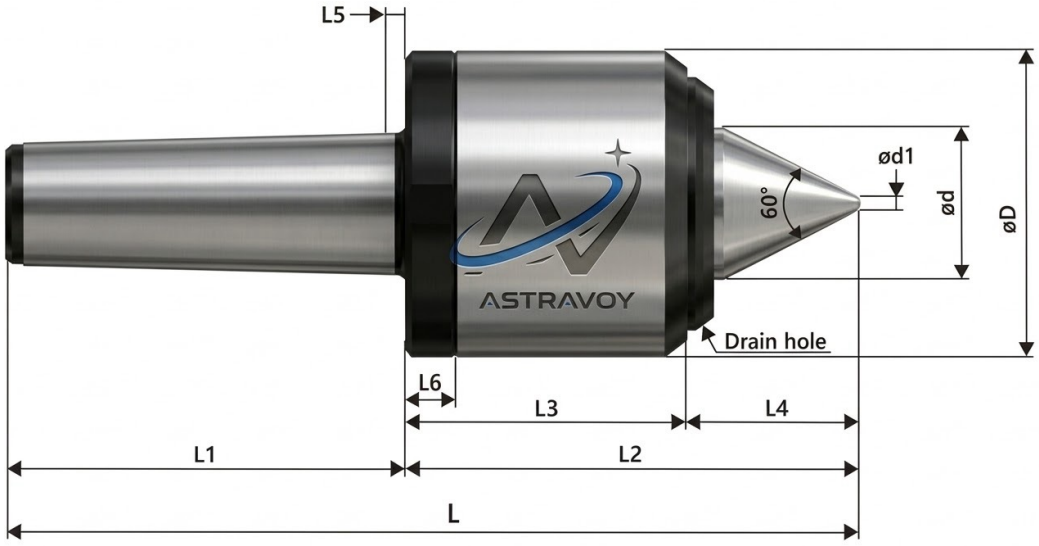

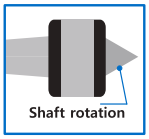



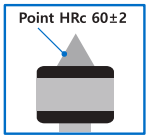





Dimension

Model No	Model	Morse Taper	Dimension										MAX Weight(kg)	MAX R.P.M	MAX Run Out(㎜)
			ΦD	ΦD1	Φd	Φd1	L	L1	L2	L3	L4	L5			
HGN80	HGN80	1:10 1:20	178	190	109	3	442.3	203	239.3	138	101.3	10	10.000	850	0.005
HGN100	HGN100	1:10 1:20	218	228	109	3	534.6	250	284.6	193	91.6	10	15.000	750	0.005
HGN120	HGN120	1:10 1:20	310	320	124	3	619.5	268.5	351	242.5	108.4	15	25.000	500	0.005

size

- ▶Large grinding center
- ▶Special size production possible
- ▶NUT Mounting
- ▶大型磨削顶尖（其他锥度非标订做）

Spindle cleaner

Astra-MT



Dimension

SIZE	Article number
MT-1	1002001
MT-2	1002002
MT-3	1002003
MT-4	1002004
MT-5	1002005
MT-6	1002006

▶Morse taper Cleaner

Technical data
Morse Taper



Dimension

Morse Taper	Dimension						
	a° (Taper Angle)		ΦD(Gauge Line)	Φd	L	L1	L2
MT0	2° 49' 24.7802"	2.823 550 06°	Φ9.045	6	53	3	4
MT1	2° 51' 26.9283"	2.857 480 08°	Φ12.065	9	57	3.5	4
MT2	2° 51' 40.7960"	2.861 332 23°	Φ17.780	14	68	6	4
MT3	2° 52' 31.4463"	2.875 401 76°	Φ23.825	19	85	6	5
MT4	2° 58' 30.4217"	2.975 117 13°	Φ31.267	25	108	8	7
MT5	3° 0' 52.3956"	3.014 554 34°	Φ44.399	35	136	8	7
MT6	2° 59' 11.7258"	2.986 590 50°	Φ63.348	51	189	10	10
MT7	2° 58' 56.7514"	2.982 430 93°	Φ83.058	67	260	12	12